Working conditions

This catalogue shows technical specifications and diagrams measured with mineral oil of 46 mm2/s *(46 cSt)* viscosity at 40°C *(104°F)* temperature.

Nominal flow rating		45 l/min	*12 US gpm*
Max. pressure	parallel or tandem circuit	315 bar	*4600 psi*
	series circuit	250 bar	*3600 psi*
Back pressure (max.) on outlet **T** port		25 bar	*362.5 psi*
Standard internal leakage A(B)->T	Δp = 100 bar - *1450 psi* with fluid and valve at 40°C - *46 cSt*	3 cm^3/min	*0.18 in^3/min*
Fluid		Mineral oil	
Fluid temperature range	with NBR (BUNA-N) seals	from -20°C to 80°C	*from -4°F to 176°F*
	with FPM (VITON) seals	from -20°C to 100°C	*from -4°F to 212°F*
Viscosity	operating range	from 15 to 300 mm^2/s	*from 15 to 300 cst*
	minimum	12 mm^2/s	*12 cSt*
	maximum	400 mm^2/s	*400 cSt*
Contamination level		19/16 - ISO 4406	*NAS 1638 class 10*
Environmental temperature for working conditions	with mechanical, pneumatic and hydraulic devices	from -40°C to 60°C	*from -40°F to 140°F*
	with electric devices	from -20°C to 60°C	*from -4°F to 140°F*

Note - For different working conditions please, contact our Sales Department.

Standard threads

REFERENCE STANDARD					
		BSP	**UN-UNF**	**METRIC**	**NPTF**
THREAD ACCORDING TO		ISO 228/1	ISO 263	ISO 262	ANSI B1.20.3
		BS 2779	ANSI B1.1 unified		
CAVITY DIMENSION ACCORDING TO	ISO	1179-1	11926-1	9974-1	
	SAE		J1926-1	J2244	J476a
	DIN	3852-2 shape X or Y		3852-1 shape X or Y	

PORTS THREADING			
	BSP	**UN-UNF**	**METRIC**
P inlet and **C** carry-over	G 3/8	3/4-16 (SAE 8)	M18x1.5
A and **B** ports	G 3/8	9/16-18 (SAE 6)	M18x1.5
T outlet	G 3/8 G 1/2*	3/4-16 (SAE 8)	M18x1.5 M22x1.5*
Pneumatic controls	NPTF 1/8-27	NPTF 1/8-27	NPTF 1/8-27
Hydraulic controls	G 1/4	9/16-18 (SAE 6)	G 1/4

(*) - only for series circuit.

Parallel (SD5-P) and tandem (SD5-SP) circuit execution

Dimensional data

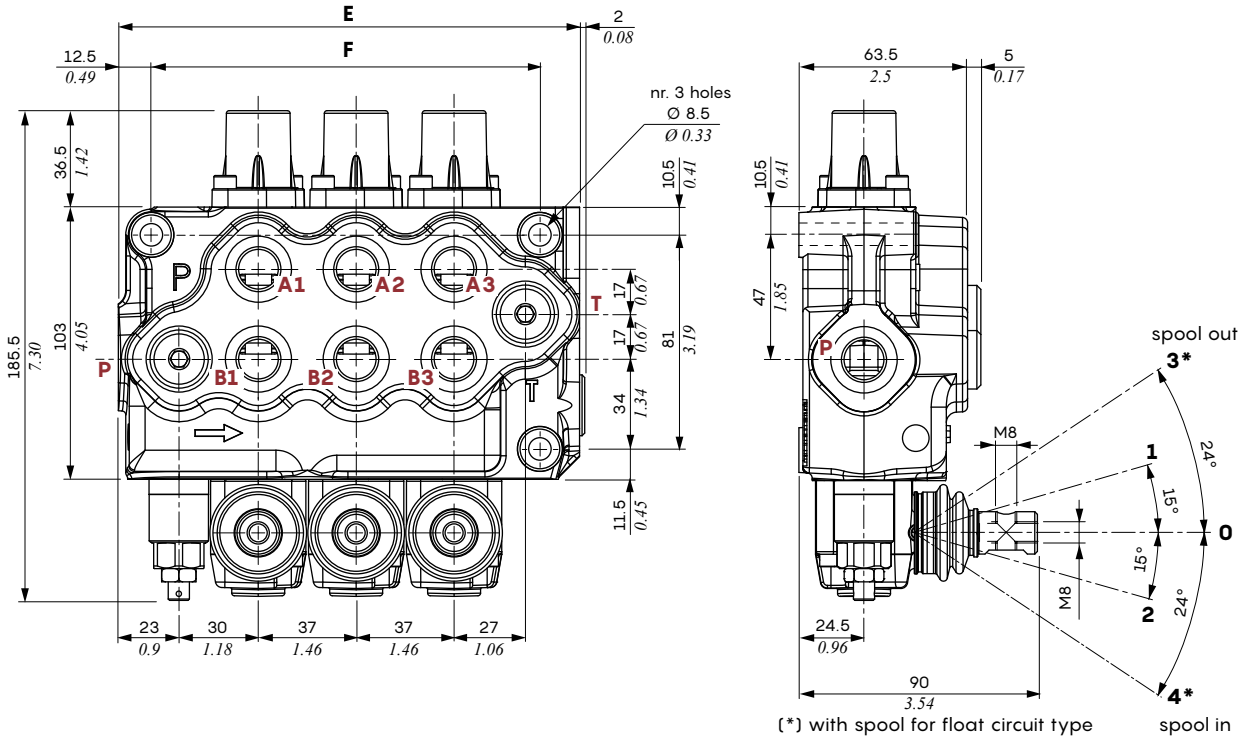

type circuit		E		F	
parallel	**tandem**	mm	*in*	mm	*in*
SD5/1-P	-	100.5	*3.96*	73	*2.87*
SD5/2-P	**SD5/2-SP**	137.5	*5.41*	110	*4.33*
SD5/3-P	**SD5/3-SP**	174.5	*6.87*	147	*5.79*
SD5/4-P	**SD5/4-SP**	211.5	*8.33*	184	*7.27*
SD5/5-P	**SD5/5-SP**	248.5	*9.78*	221	*8.7*
SD5/6-P	**SD5/6-SP**	285.5	*11.24*	258	*10.16*
SD5/7-P	**SD5/7-SP**	322.5	*12.7*	295	*11.61*

Note - Drawings and dimensions are referred to a **BSP** threading configuration.

Parallel (SD5-P) and tandem (SD5-SP) circuit execution

Hydraulic circuit

Parallel circuit execution (standard configuration)

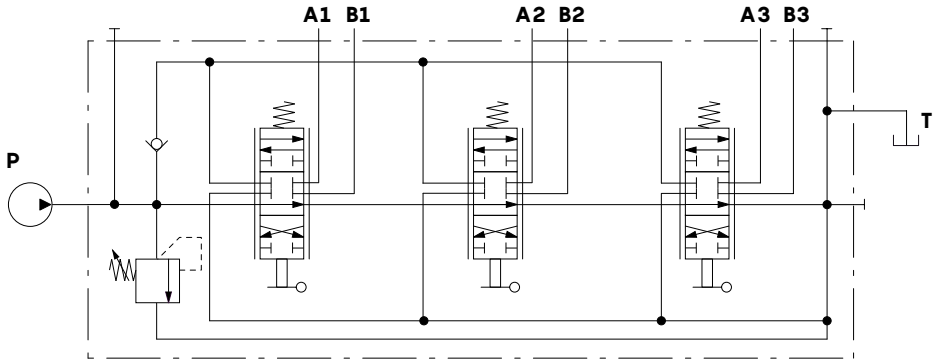

Description example:
SD5/3-**P**(KG3—120)/18L/18L/18L/**AET**

Parallel circuit execution (configuration with upper inlet and outlet)

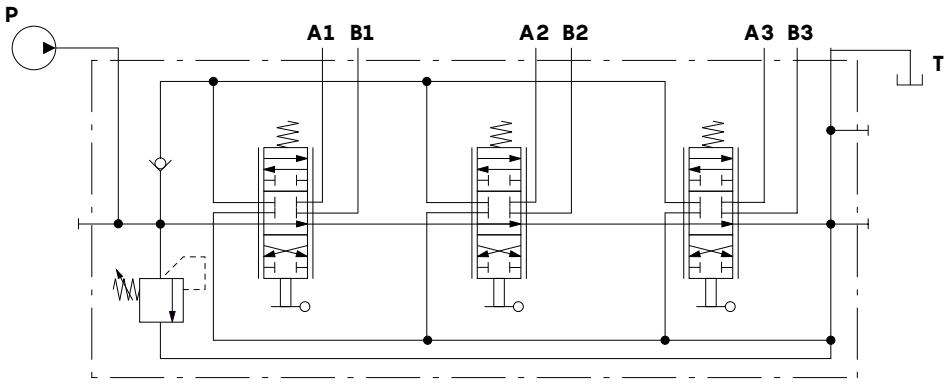

Description example:
SD5/3-**P**(KG3—120)/18L/18L/18L/**AET-PSA**

Tandem circuit execution

The description of SD5 valve with tandem circuit is marked with letters "SP" and one figure which indicate the downstream sections for tandem connection.

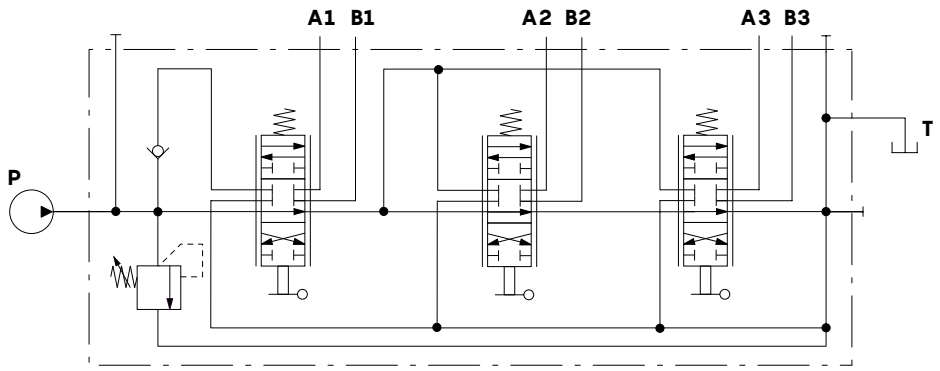

Description example:
SD5/3-**SP2**(KG3—120)/18L/18L/18L/**AET**

Parallel (SD5-P) and tandem (SD5-SP) circuit execution

Performance data

Parallel circuit execution

P⇒T pressure drops

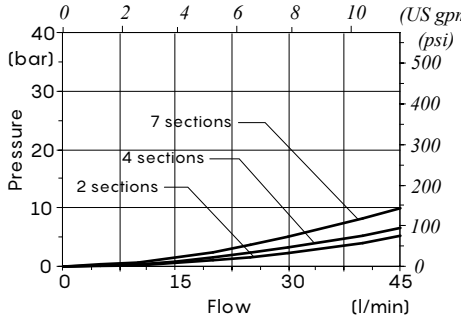

P⇒A(B) pressure drops
7 sections valve

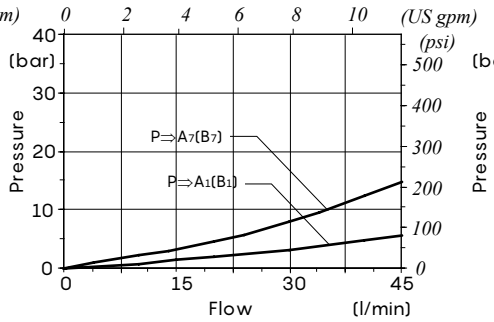

A(B)⇒T pressure drops
7 sections valve

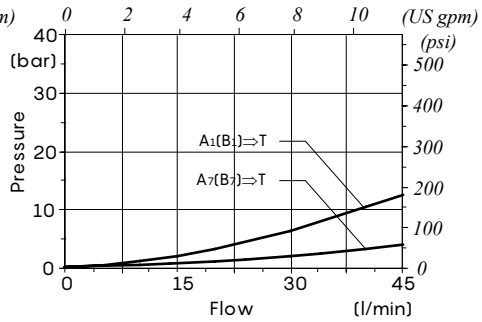

Tandem circuit execution

P⇒T pressure drops

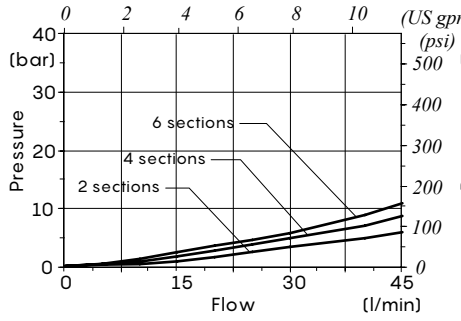

P⇒A(B) pressure drops
6 sections valve

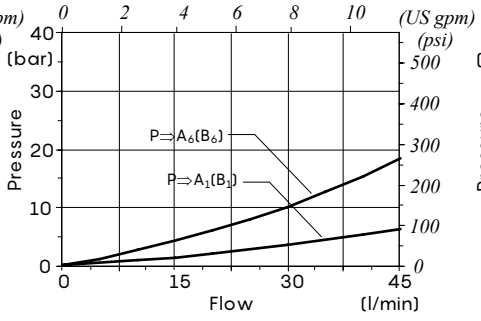

A(B)⇒T pressure drops
6 sections valve

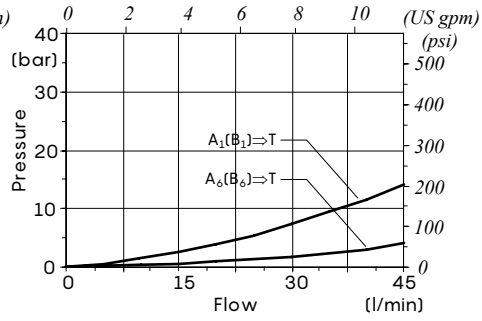

Ordering codes

nr. of sections | Valve setting (bar) | Valve setting (bar) | Ports thread

SD5/3-P (JG3-120) / VD11 / 1 8 L / 1 8IM/ 1 8ES3 . P3(G3-100) / AET-ELNW(NO) - ..... - 12VDC - <CVN>

1 2 7* 3 4 5 3 6 3 6 7* 8 9 10 11 Optional painting **

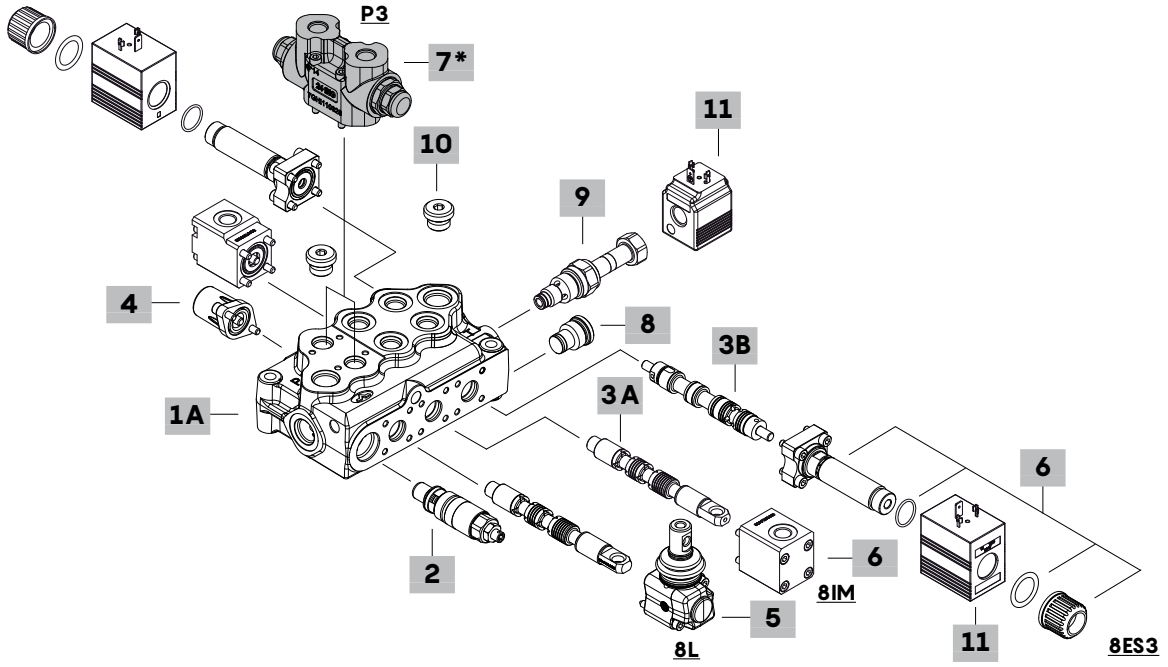

SD5/1-N (KG3-120) / 1 8 L - ..... - <CVN>

1 2 3 4 5 10

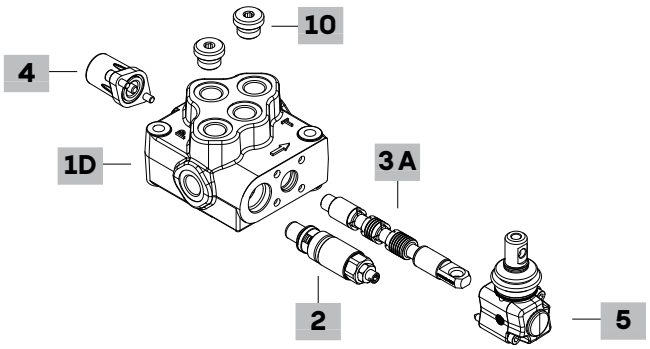

SD5/1-D (KG3-120) / 1 8 L - .... - <CVN>

1 2 3 4 5 10

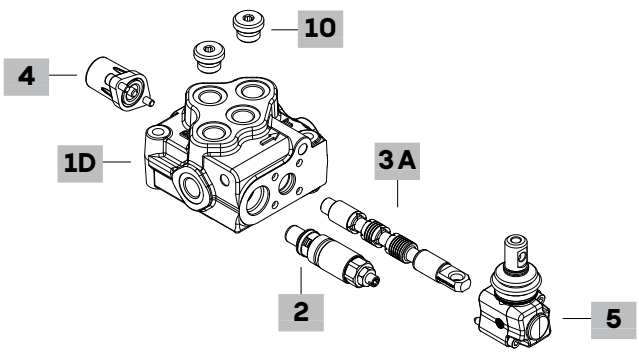

Notes - (*) For all auxiliary valves see dedicated pages from 62 to 77. All valves requires special machining on the SD5 body.
(**) SD5 valve can be supplied with one coat of black paint (CVN configuration). For different colour please contact our Sales Dpt.

Ordering codes

1A Body kit for parallel circuit execution (1)

Available body kit for mixed pilot controls (2)

TYPE	CODE	DESCRIPTION
For mechanical controls (1)		
SD5/1-P	5KC1193000	1 section
SD5/2-P	5KC1223000	2 sections
SD5/3-P	5KC1243000	3 sections
SD5/4-P	5KC1273000	4 sections
SD5/5-P	5KC1313000	5 sections
SD5/6-P	5KC1353000	6 sections
SD5/7-P	5KC13E3000	7 sections
For proportional hydraulic and ON/OFF electric controls		
SD5/1-P-IM-ES	5KC1193100	1 section
SD5/2-P-IM-ES	5KC1223100	2 sections
SD5/3-P-IM-ES	5KC1243100	3 sections
SD5/4-P-IM-ES	5KC1273100	4 sections
SD5/5-P-IM-ES	5KC1313100	5 sections
SD5/6-P-IM-ES	5KC1353100	6 sections
SD5/7-P-IM-ES	5KC13E3100	7 sections

1B Body kit for tandem circuit execution (1)

The letter "SP" and one figure indicate the downstream sections for tandem connection (2)

TYPE	CODE	DESCRIPTION
For mechanical controls		
SD5/2-SP1	5KC1183000	2 sections
SD5/3-SP2	5KC12G3000	3 sections
SD5/4-SP3	5KC1293000	4 sections
SD5/5-SP4	5KC1333000	5 sections
SD5/6-SP5	5KC1373000	6 sections
SD5/7-SP6	5KC13F3000	7 sections
For proportional hydraulic and ON/OFF electric controls		
SD5/2-SP1-IM-ES	5KC1183000A	2 sections
SD5/3-SP2-IM-ES	5KC12G3000A	3 sections
SD5/4-SP3-IM-ES	5KC1293000A	4 sections
SD5/5-SP4-IM-ES	5KC1333000A	5 sections
SD5/6-SP5-IM-ES	5KC1373000A	6 sections
SD5/7-SP6-IM-ES	5KC13F3000A	7 sections

1C Body kit for series circuit execution (1)

The letter "S" and one figure indicate the downstream sections for series connection (2)

TYPE	CODE	DESCRIPTION
For mechanical controls		
SD5/2-S1	5KC1153040	2 sections
SD5/3-S1	5KC1253003	3 sections
SD5/4-S1	5KC1283003	4 sections
SD5/5-S1	5KC1324033	5 sections
SD5/6-S1	5KC1363003	6 sections
For proportional hydraulic and ON/OFF electric controls		
SD5/2-S1-IM-ES	5KC1153040A	2 sections
SD5/3-S1-IM-ES	5KC1253103	3 sections
SD5/4-S1-IM-ES	5KC1283100	4 sections
SD5/5-S1-IM-ES	5KC1324100	5 sections
SD5/6-S1-IM-ES	5KC1363003A	6 sections

1D Body kit for single section execution (1)

TIPO	CODE	DESCRIPTION
SD5/1-N	5KC1203040 (1)	Without "carry-over", for mechanical control
SD5/1-N-IM-ES	5KC1203100 (1)	As SD5/1-N for proportional hydraulic and ON/OFF controls
SD5/1-D	5KC1213000 (1)	As SD5/1-N with "carry-over"
SD5/1-D-IM-ES	5KC1213100	As SD5/1-N-IM-ES with "carry-over"

2 Main pressure relief valves page 20

Standard setting is referred to 10 l/min *(26 US gpm)*.

TYPE	CODE	DESCRIPTION
SV	XTAP623282	Valve blanking plug
VMD5 type K (directly controlled)		
(KG1-30)	5KIT105121	Range from 20 to 50 bar *(from 290 to 725 psi)*, std setting 30 bar *(435 psi)*
(KG2-80)	5KIT105122	Range from 40 to 100 bar *(from 580 to 1450 psi)*, std setting 80 bar *(1160 psi)*
(KG3-120)	5KIT105123	Range from 80 to 200 bar *(from 1160 to 2900 psi)*, std setting 120 bar *(1740 psi)*
(KG4-220)	5KIT105124	Range from 180 to 315 bar*(from 2610 to 4570 psi)*, std setting 220 bar *(3190 psi)*
VMD5 type J (Zero-leak directly controlled)		
(JNG1-20)	5KIT105500	Range from 10 to 40 bar *(from 145 to 580 psi)*, std setting 20 bar *(290 psi)*
(JNG2-60)	5KIT105512	Range from 40 to 60 bar *(from 580 to 870 psi)*, std setting 60 bar *(870 psi)*
(JNG3-120)	5KIT105513	Range from 50 to 190 bar *(from 725 to 2755 psi)*, std setting 120 bar *(1740 psi)*
(JNG4-250)	5KIT105514	Range from 160 to 315 bar *(from 2320 to 4570 psi)*, std setting 250 bar *(3625 psi)*

3A Spools for mechanical and hydraulic controls page 22

Spools indicated with (*) can also be used on proportional hydraulic controls. For dedicated body see **1B**.

TYPE	CODE	DESCRIPTION
Doppio effetto, 3 posizioni		
1(*)	3CU1210130	A and B closed in neutral position
1[S]	3CU1210133 (2)	As type 1, with low leakage
1[XS]	3CU1210131 (2)	As type 1, with extra low leakage
1[XL]	3CU1210132 (2)	As type 1, with low friction
1CP	3CU1210141	With positive overlap
1A	3CU1221130	With A connect to tank in neutral position
1B	3CU1222130	With B connect to tank in neutral position
1(11A)	3CU1210320 (2) (3)	As type 1, for pressure kick-out: **it requires 11A control kit with additional body machining**
1(9A-21A)	3CU1210330 (2) (3)	As type 1, for pressure kick-out: **it requires 9A-21A control kit with additional body machining**
1CS(*)	3CU1210200	As type 1, metering type
1CSVR	3CU1211200	As type 1, fine metering type,with load check valve
1CEX(*)	3CU1210230	As type 1, extra metering type
1CEXX	3CU1210231	As type 1, extra fine metering type
1A-CEX	3CU1221230	With A to tank in neutral position, extra metering type
1B-CEX	3CU1222230	With B to tank in neutral position, extra metering type
1CSD	3CU1210201 (2)	As type 1, for flow up to 15 l/min *(3.96 US gpm)*: **it requires additional body machining**
1CSE	3CU1210202 (2)	As type 1, for flow up to 35 l/min *(9.25 US gpm)*, **it requires additional body machining**
1CSF	3CU1210203 (2)	As type 1, for flow up to 45 l/min *(11.89 US gpm)*, **it requires additional body machining**

Notes - (1) Codes are referred to **BSP** threads - (2) Please contact our Sales Dpt for more information - (3) Not usable on bodies with series circuits.

Main pressure relief valves

Dimensions and hydraulic circuit

Description example: **K G 1 - 30**

- type: directly controlled = **K**; zero-leak directly controlled = **JN**
- spring type
- configuration: **G** = with screw; **V** = with handweel; **H** = set and locked; **ZT** = fix setting with plastic cap
- valve setting (bar)

Relief valve blanking plug

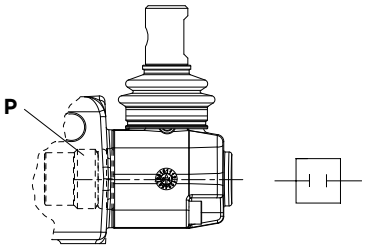

Type G configuration
with screw

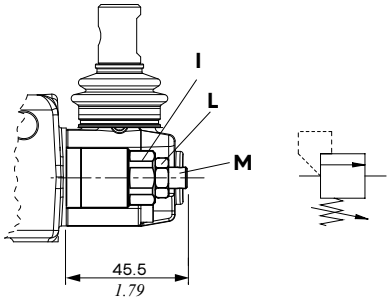

Type V configuration
with handweel

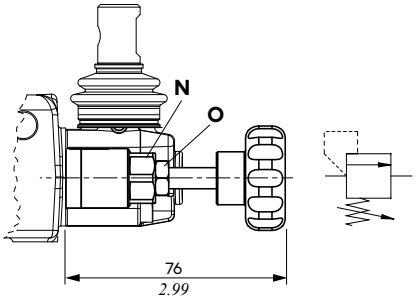

Type H configuration
set and locked

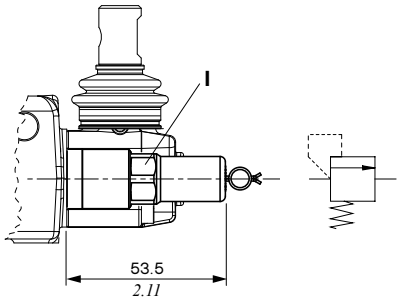

Type ZT configuration
fix setting with plastic cap

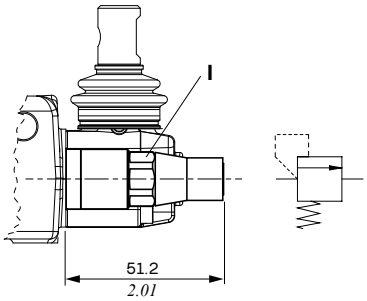

Wrenches and tightening torques
P = allen wrench 10 - 42 Nm *(31 lbft)*
I = wrench 19 - 42 Nm *(31 lbft)*
L = wrench 13 - 24 Nm *(17.7 lbft)*
M = allen wrench 4
N = wrench 19- 50 Nm *(36,9 lbft)*
O = wrench 13 - 30 Nm *(22.1 lbft)*

Spools

Double acting

Spool types 1 (1[S]-1[XS]-1[XL]-1R-1CS-1CEX-1CP-1CEXX-1CSD-1CSE-1CSF-1ES-1[ES3LHE])
3 positions, A and B closed in neutral position

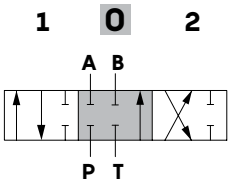

Stroke
position 1: + 5.5 mm *(+0.216 in)*
position 2: - 5.5 mm *(-0.216 in)*
for 1ES and 1(ES3LHC)
nominal position 1: + 3.4 mm *(+0.134 in)*
nominal position 2: - 3.4 mm *(-0.134 in)*

Spool types 1A (1ACEX-1AES)
3 positions, with A connect to tank in neutral position

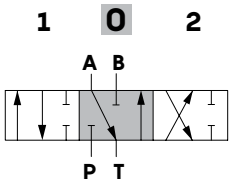

Stroke
position 1: + 5.5 mm *(+0.216 in)*
position 2: - 5.5 mm *(-0.216 in)*
for 1AES
nominal position 1: + 3.4 mm *(+0.134 in)*
nominal position 2: - 3.4 mm *(-0.134 in)*

Spool types 1B (1BCEX)
3 positions, with B connect to tank in neutral position

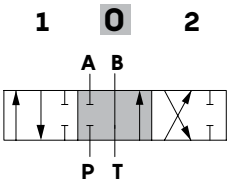

Stroke
position 1: + 5.5 mm *(+0.216 in)*
position 2: - 5.5 mm *(-0.216 in)*

Spool metering types 1-1CSF

P⇒A(B)⇒B(A)⇒T
Q_{in} = 45 l/min / *(11.89 US gpm)*
$P_{(on\ ports)}$ = 100 bar / *(1450 psi)*

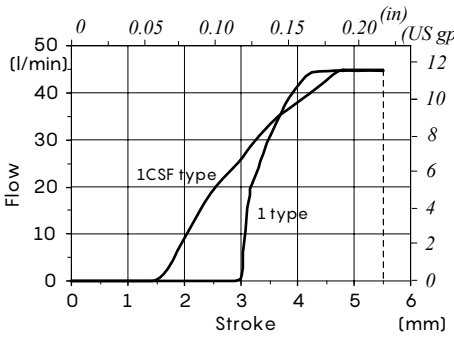

Spool metering types 1CS-1CSE

P⇒A(B)⇒B(A)⇒T
Q_{in} = 30 l/min / *(7.92 US gpm)*
$P_{(on\ ports)}$ = 100 bar / *(1450 psi)*

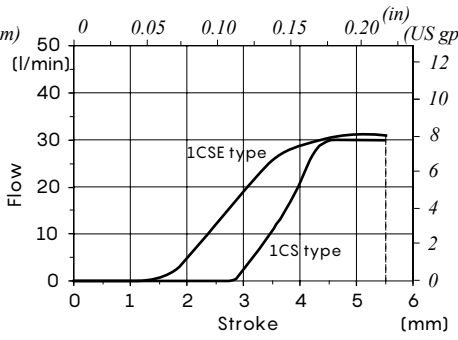

Spool metering types 1CSD-1CEX-1CEXX

P⇒A(B)⇒B(A)⇒T
Q_{in} = 15 l/min / *(3.96 US gpm)*
$P_{(on\ ports)}$ = 100 bar / *(1450 psi)*

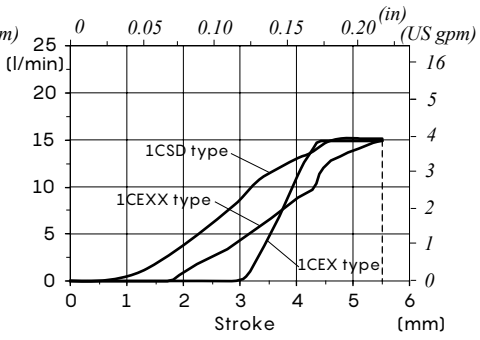

Spool type 1 CSVR
3 positions, A and B closed in neutral position, with load check valve

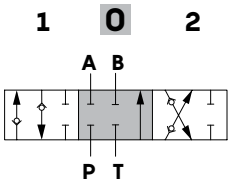

Stroke
position 1: + 5.5 mm *(+0.216 in)*
position 2: - 5.5 mm *(-0.216 in)*

Spool type 1A (11A)
3 positions, with A and B closed in neutral position, **for pressure kick-out**

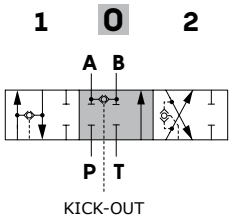

Stroke
position 1: + 5.2 mm *(+0.205 in)*
position 2: - 5.2 mm *(-0.205 in)*

Spool type 1A (9A-21A)
3 positions, with A and B closed in neutral position, **for pressure kick-out**

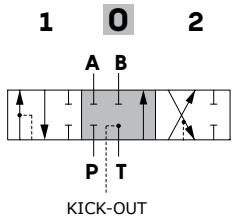

Stroke
position 1: + 5.2 mm *(+0.205 in)*
position 2: - 5.2 mm *(-0.205 in)*

Spools

Single acting

Spool type 3 (3ES-3[ES3LHC])
3 positions, single acting in A

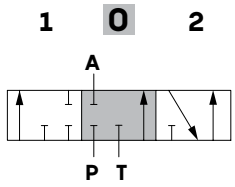

Stroke
position 1: + 5.5 mm *(+0.216 in)*
position 2: - 5.5 mm *(-0.216 in)*
for 3ES and 3(ES3LHC)
nominal position 1: + 3.4 mm *(+0.134 in)*
nominal position 2: - 3.4 mm *(-0.134 in)*

Spool type 4
3 positions, single acting in B

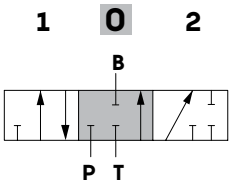

Stroke
position 1: + 4 mm *(+0.157 in)*
position 2: - 4 mm *(-0.157 in)*

Double acting for float circuit type

Spool type 5DY
4 positions, floating in position 3 (4th position), spool in

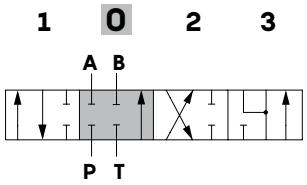

Stroke
position 1: + 4.5 mm *(+0.177 in)*
position 2: - 4.5 mm *(-0.177 in)*
position 3: - 9 mm *(-0.354 in)*

Spool metering type 5DY

Q_{in} = 45 l/min / *(11.89 US gpm)*
$P_{(on\ ports)}$ = 100 bar / *(145 psi)*

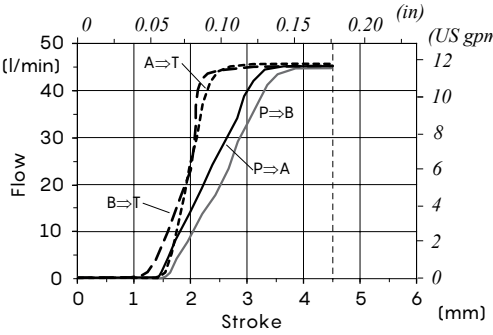

Pressure drop in position 3

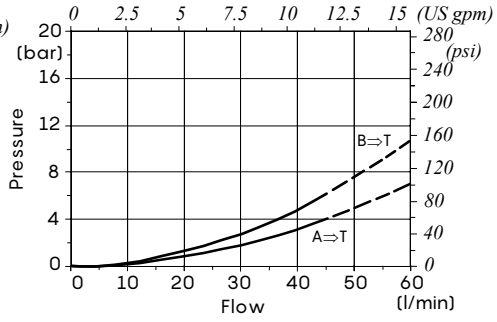

SdC2449_cursori5PY-5WY 5DY come da vecchio catalogo

Spool type 5WY
4 positions, floating in position 3 (4th position), spool in, with check valve on A

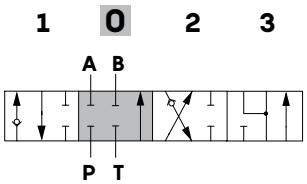

Stroke
position 1: + 4.5 mm *(+0.177 in)*
position 2: - 4.5 mm *(-0.177 in)*
position 3: - 9 mm *(-0.354 in)*

Spool metering type 5WY

Q_{in} = 45 l/min / *(11.89 US gpm)*
$P_{(on\ ports)}$ = 100 bar / *(145 psi)*

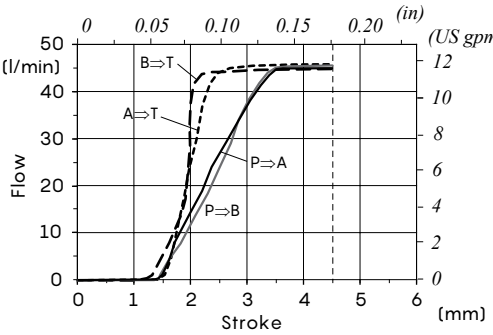

Pressure drop in position 3

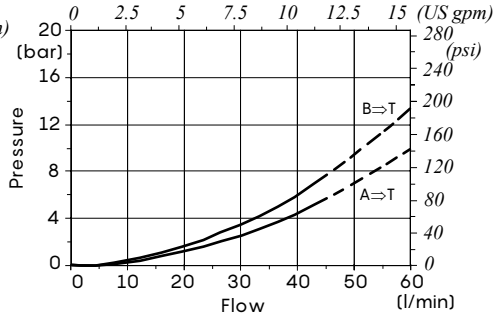

A side controls

Free control

Type 7

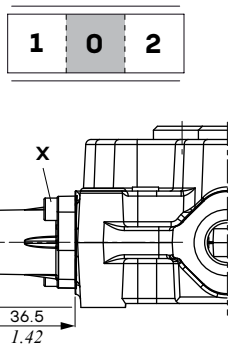

Wrenches and tightening torques
X= allen wrench 4-6.6 Nm *(4.9 lbf)*

3 positions, spring return in neutral position

control kit	Ordering code with		
	C type spring	D type spring	E type spring
8	5V08205000	**5V08105000**	5V08405000
8WPO	5V08205003	**5V08105003**	5V08405003
8F2	5V08205101	**5V08105101**	5V08405101
8D	5V08205200	**5V08105200**	5V08405200
8D1	/	**5V08105210**	/
8D2	5V08205220	**5V08105220**	/
8D3	/	**5V08105230**	5V08405230
8TL	**5V08105310**	5V08105312	5V08105314
8TCL	**5V08105300**	/	5V08405300

Note: bold code represent standard version

Force-Stroke diagram
(see the table)

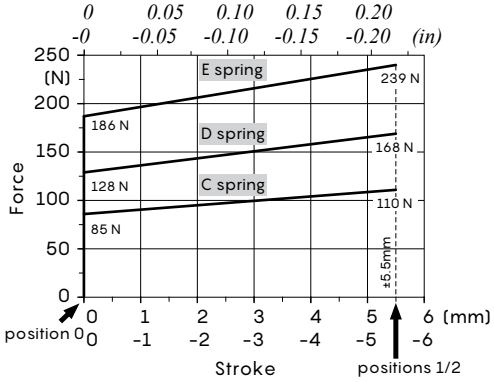

Type 6
Not pre-assembled kit

Type 8
With pre-assembled kit
(standard D spring)

Type 8WPO
Water proof type

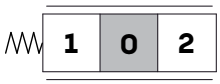

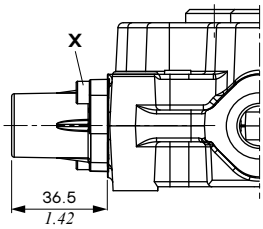

Type 8F2
Spool stroke limiter on port B

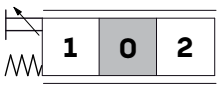

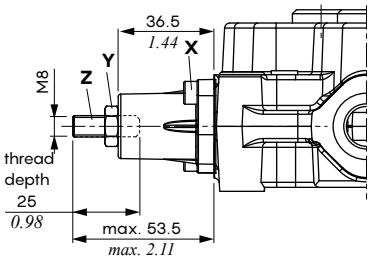

Type 8TCL
As type 8 flexible cable control arrangement

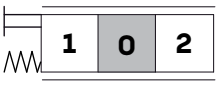

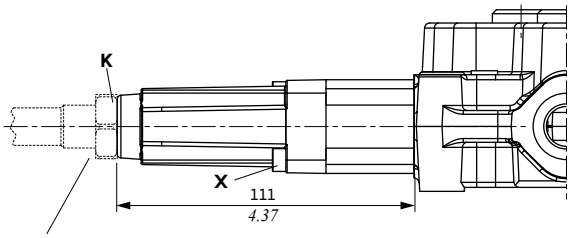

Flexible cable type CD
and CG not included, see
dedicated remote controls
catalogue

Wrenches and tightening torques
X= allen wrench 4-6.6 Nm *(4.9 lbf)*
Y= wrench 13-24 Nm *(17.7 lbf)*
Z= allen wrench 4
K= wrench 24

Outlet port options

It's possible to have open center, closed center and carry-over. Are available unloader valves with special bodies: for information please contact our Sales Dpt.

AET: open center

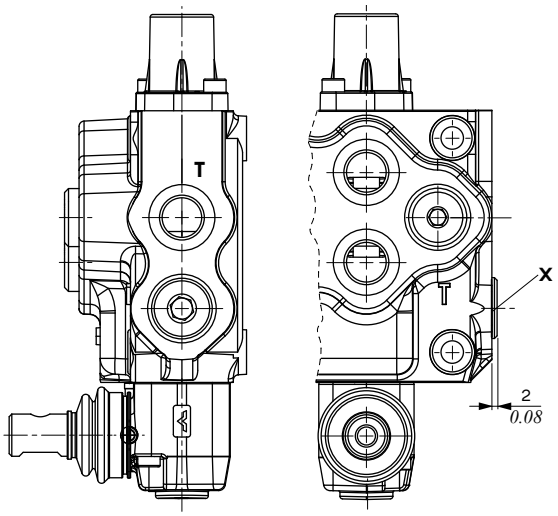

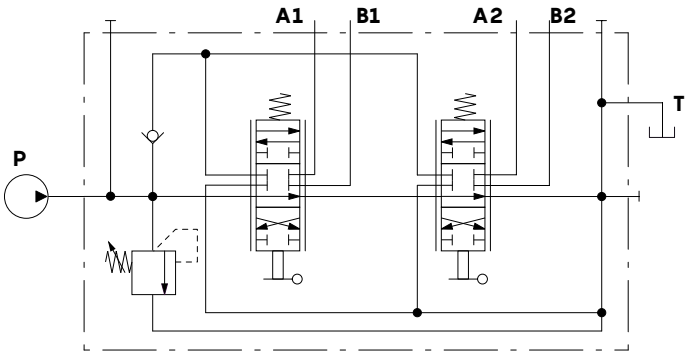

Description example:
SD5/3-P(JG3—120)/18L/18L/**AET**
(see page 6 for other AET examples)

Wrenches and tightening torques
X= allen wrench 8-24 Nm *(17.7 lbtf)*

AEK: closed center

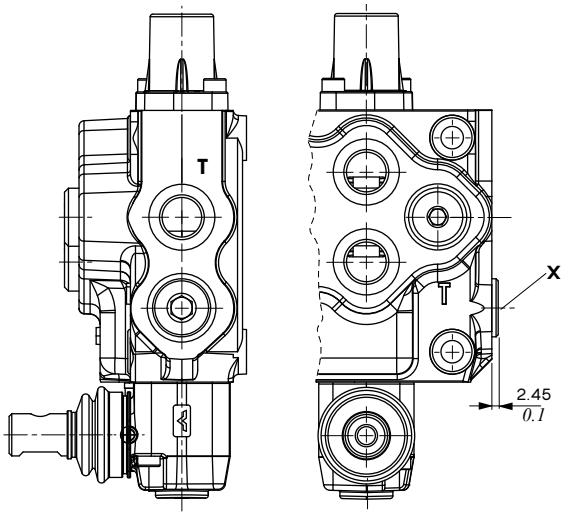

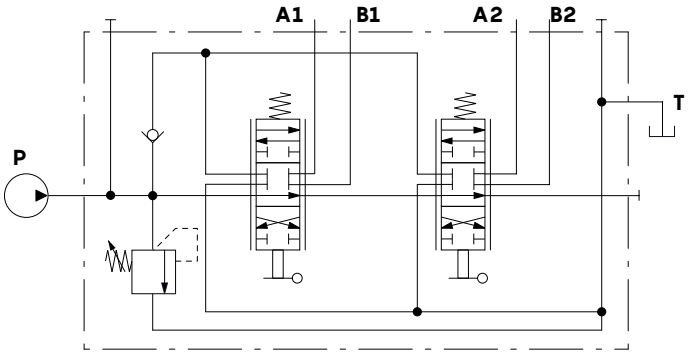

Description example:
SD5/3-P(JG3—120)/18L/18L/**AEK**

Wrenches and tightening torques
X= allen wrench 8-24 Nm *(17.7 lbtf)*

Outlet port options

AE: with carry-over

AE-G3/8

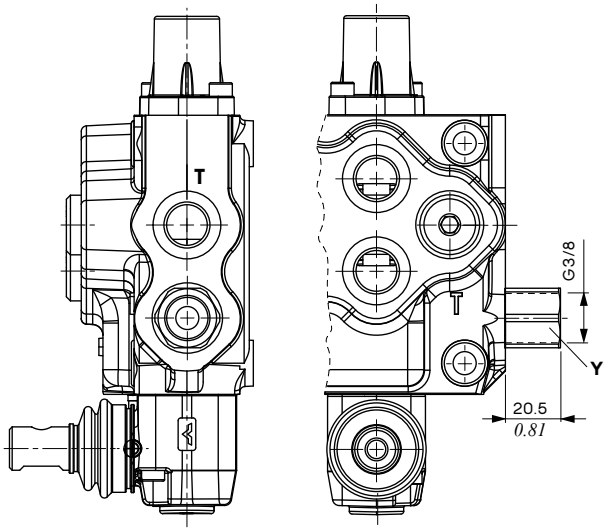

AE2-G3/8

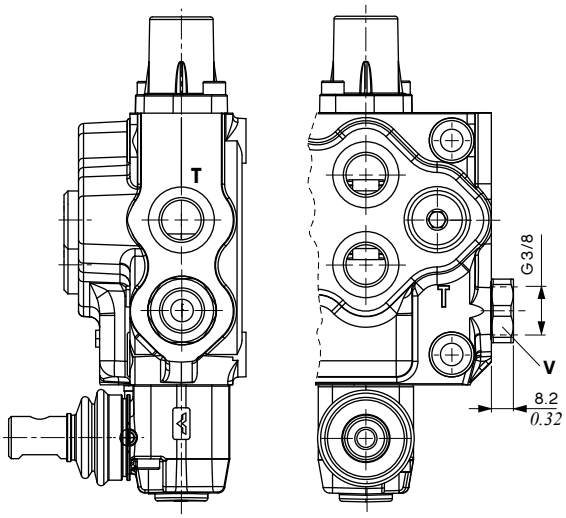

AE-G1/2

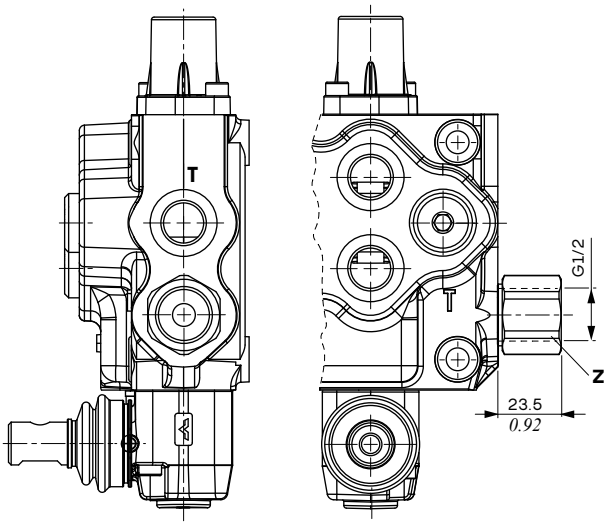

Wrenches and tightening torques
Y= wrench 22-24 Nm *(17.7 lbtf)*
V= wrench 24-24 Nm *(17.7 lbtf)*
Z= wrench 27-24 Nm *(17.7 lbtf)*

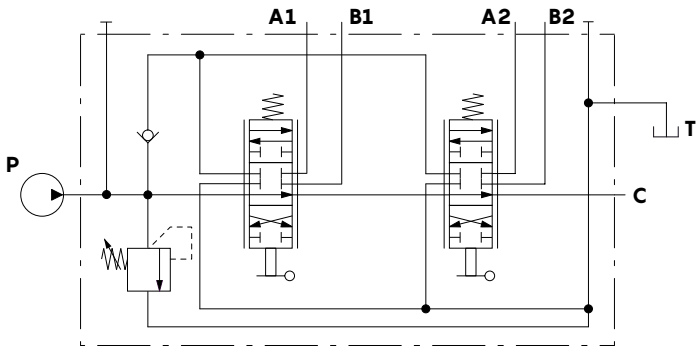

Description example:
SD5/2-P(JNG3—120)/18L/18L/**AE**