## Working conditions

This catalogue shows technical specifications and diagrams measured with mineral oil of 46 $mm^2/s$ - *46 cSt* viscosity at 40°C temperature.

| | | | |
|---|---|---|---|
| Nominal flow rating | | 70 l/min | |
| Operating pressure (maximum) | *parallel circuit* | 315 bar | *4600 psi* |
| | *series circuit* | 250 bar | *3600 psi* |
| Max. back pressure | *on outlet **T*** | 25 bar | *360 psi* |
| Internal leakage A(B)→T | *Δp=100 bar - 1450 psi, fluid and valve at 40°C* | 3 $cm^3$/min | *0.18 $in^3$/min* |
| Fluid | | Mineral base oil | |
| Fluid temperature | *with NBR seals* | from -20°C to 80°C | |
| | *with FPM (VITON) seals* | from -20°C to 100°C | |
| Viscosity | *campo di lavoro* | from 15 to 75 $mm^2/s$ | *from 15 to 75 cSt* |
| | *minima* | 12 $mm^2/s$ | *12 $mm^2/s$* |
| | *massima* | 400 $mm^2/s$ | *400 $mm^2/s$* |
| Max level of contamination | | 19/16 - ISO 4406 | *19/16 - ISO 4406* |
| Ambient temperature for working conditions | *with mechanical control* | from -40°C to 60°C | |
| | *with hydraulic, pneumatic controls* | from -30°C to 60°C | |
| | *with electric controls* | from -20°C to 50°C | |

NOTE - *For different conditions please contact Sales Dept.*

## Standard threads

**REFERENCE STANDARDS**

| | | BSP | UN-UNF | METRIC | NPTF |
|---|---|---|---|---|---|
| THREAD ACCORDING TO | | ISO 228/1 | ISO 263 | ISO 262 | ANSI B1.20.3 |
| | | BS 2779 | ANSI B1.1 unified | | |
| CAVITY ACCORDING TO | ISO | 1179 | 11926 | 9974-1 | |
| | SAE | | J1926 | | J476a |
| | DIN | 3852-2 shape X or Y | | 3852-1 shape X or Y | |

**PORTS THREAD**

| MAIN PORTS | BSP | UN-UNF | METRIC |
|---|---|---|---|
| IInlet **P** and carry-over **C** | G 1/2 | 7/8-14 (SAE 10) | M18x1.5 |
| Ports **A** and **B** | G 1/2 | 3/4-16 (SAE 8) | M18x1.5 |
| Outlet **T** | G 3/4 | 7/8-14 (SAE 10) | M22x1.5 |
| CONTROL PILOT PORTS | | | |
| Pneumatic | NPTF 1/8-27 | NPTF 1/8-27 | NPTF 1/8-27 |
| Hydraulic | G 1/4 | 9/16-18 (SAE 6) | G 1/4 |

## Dimensional data (parallel circuit)

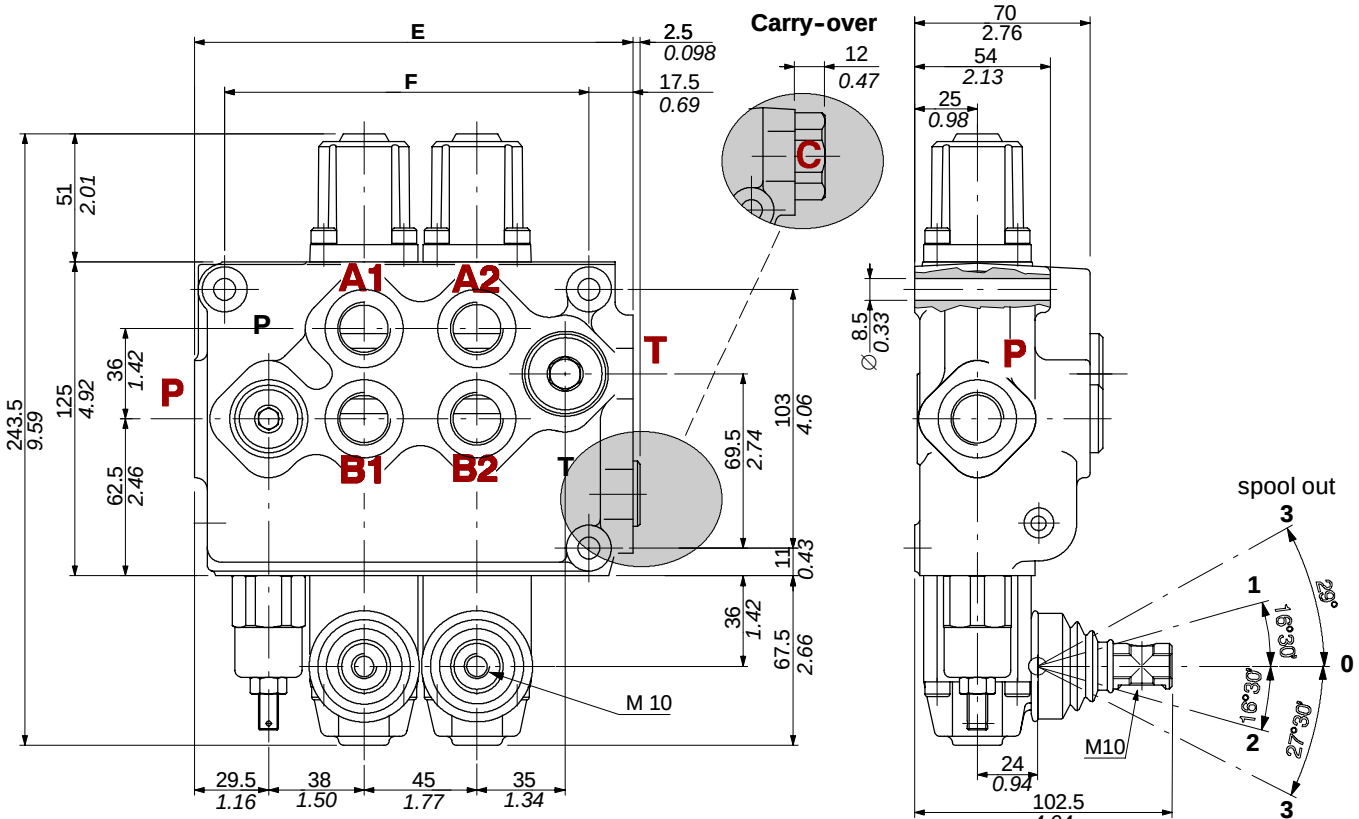


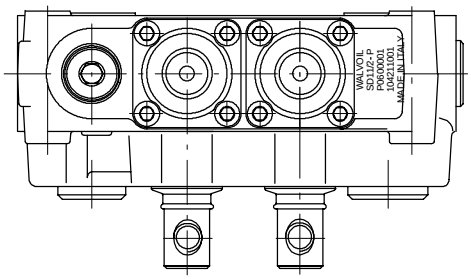

**WALVOIL**
**SD11/2-P**
**P0600001**
**104211001**
**MADE IN ITALY**

Valve type

Production batch :
P06 = production year (2006)
00001 = progressive number

Valve code

| TYPE | E | | F | | Weight | |
|---|---|---|---|---|---|---|
| | mm | *in* | mm | *in* | kg | *lb* |
| **SD11/1-P** | 130 | *5.12* | 100 | *3.94* | 6.1 | *13.4* |
| **SD11/2-P** | 174.5 | *6.87* | 145 | *5.71* | 8.8 | *19.4* |
| **SD11/3-P** | 219.5 | *8.64* | 190 | *7.48* | 11.4 | *25.1* |

| TYPE | E | | F | | Weight | |
|---|---|---|---|---|---|---|
| | mm | *in* | mm | *in* | kg | *lb* |
| **SD11/4-P** | 264.5 | *10.41* | 235 | *9.25* | 14.2 | *31.3* |
| **SD11/5-P** | 309.5 | *12.19* | 280 | *11.02* | 16.7 | *36.8* |
| **SD11/6-P** | 354.5 | *13.96* | 325 | *12.80* | 19.4 | *42.8* |

## Hydraulic circuit

### Parallel

Standard configuration with side inlet and open center circuit (**AET** configuration).

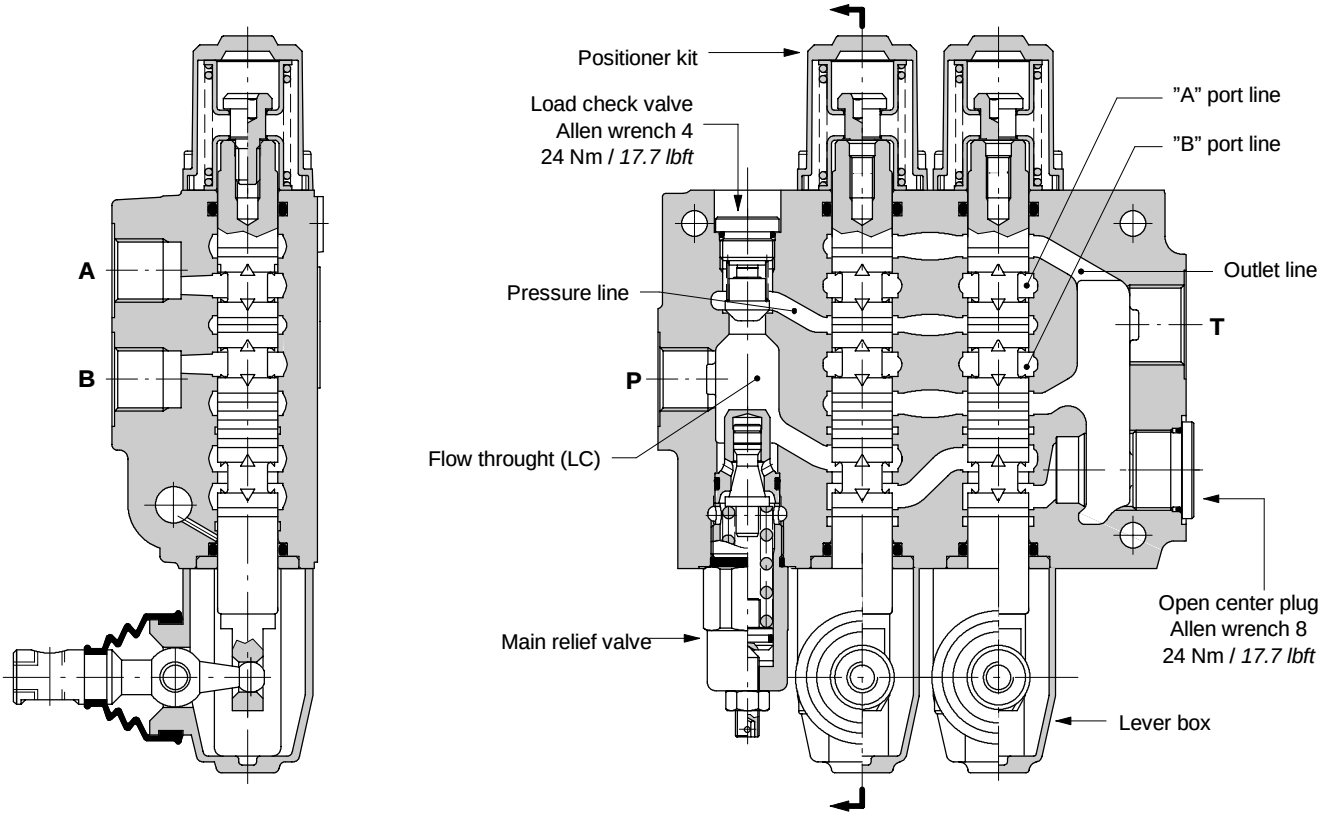


**Standard configuration**

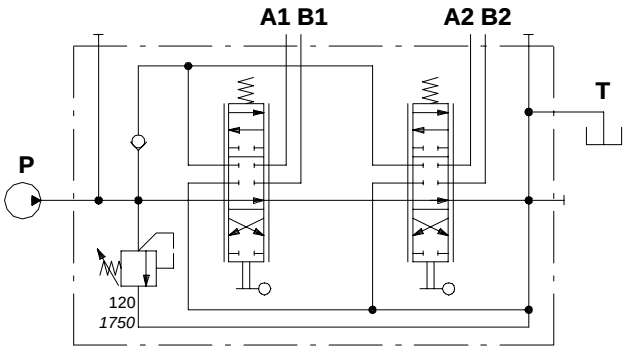


Description example:
SD11/2-P(JG3-120)/18L/18L/**AET**

**Top inlet and outlet configuration**

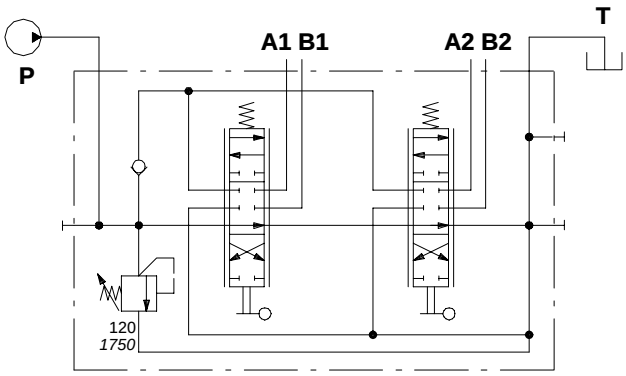


Description example:
SD11/2-P(JG3-120)/18L/18L/**AET-PSA**

## Performance data (pressure drop vs. flow)

### Open center

From side inlet to side outlet.

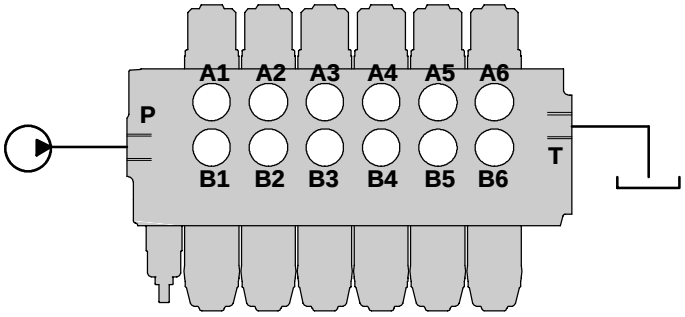


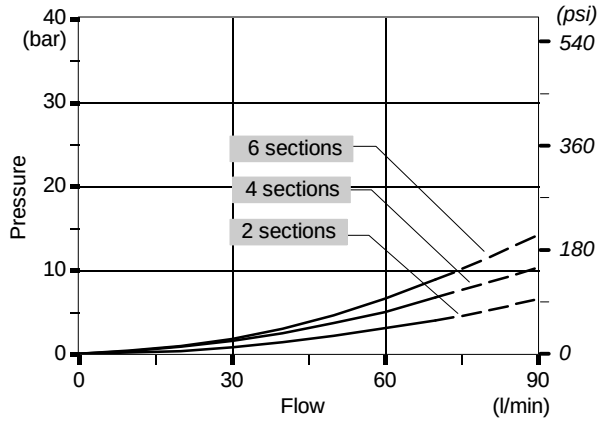


### Inlet to work port

From side inlet to **A** port (spool in position **1**) or **B** port (spool in position **2**).

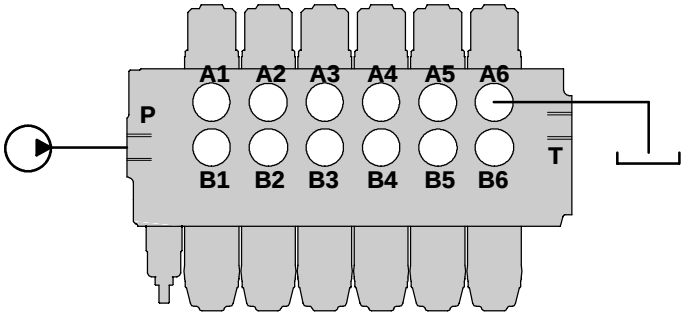


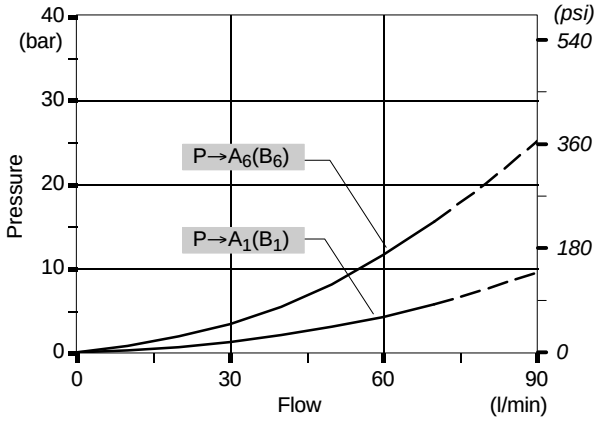


### Work port to outlet

From **A** port (spool in position **2**) or **B** port (spool in position **1**) to side outlet.

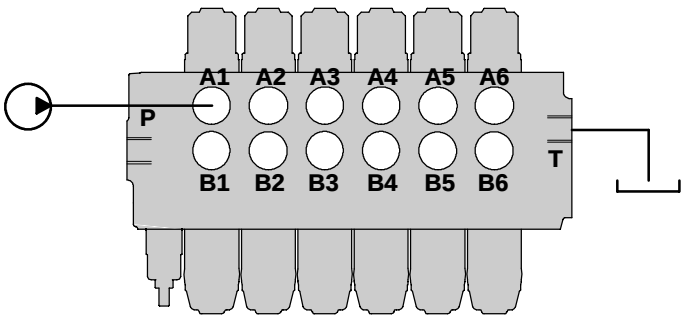


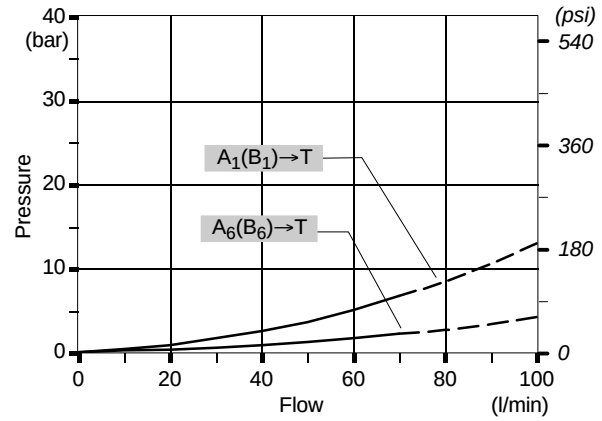


NOTE – *Measured with spool type 1.*

## Ordering codes

### Description example:

1st section — following section

**SD11 / 2 - P (KG3-120) / 1 8 L / 18L . P3(G3-120) / AET - PSL ***

1. 2. 3. 4. 5. 6. 7. 8.

2. Main relief valve setting (bar)

6. Port valve setting (bar)

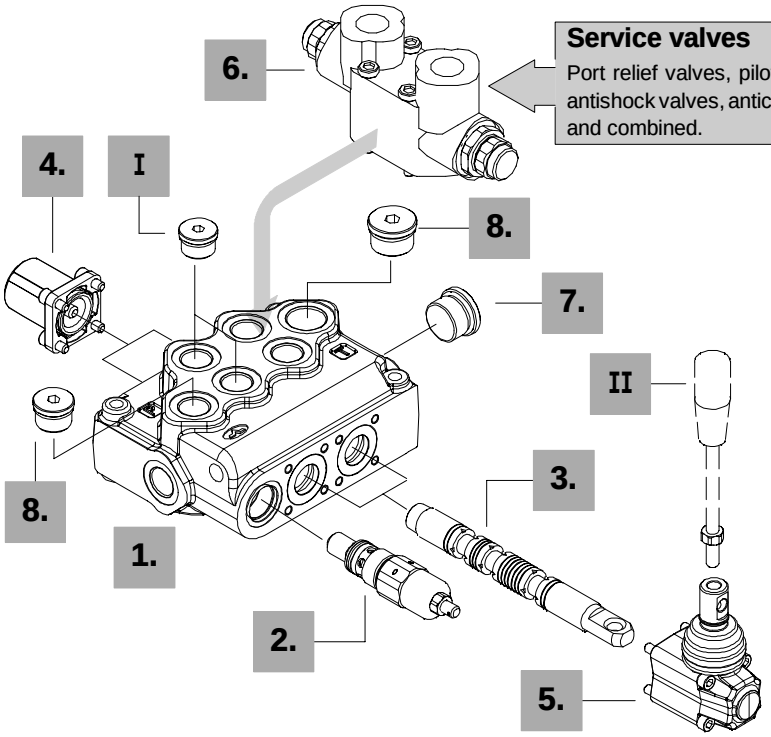


**Service valves** *page 48*
Port relief valves, pilot check valves, antishock valves, anticavitation valves and combined.

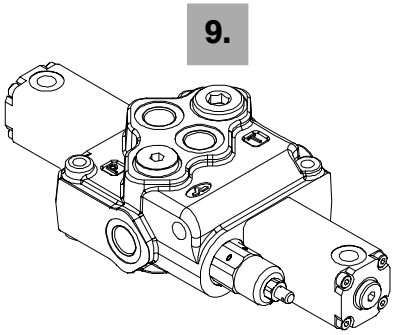


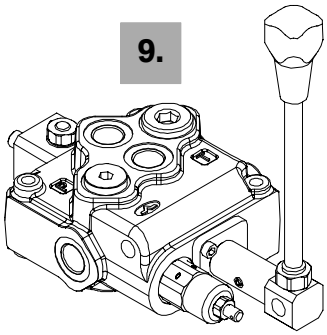


### 1. Body kit *

| TYPE | CODE | DESCRIPTION |
|---|---|---|
| **1-P** | 5KC1413000 | Parallel, 1 section |
| **2-P** | 5KC1423000 | Parallel, 2 sections |
| **3-P** | 5KC1443000 | Parallel, 3 sections |
| **4-P** | 5KC1473000 | Parallel, 4 sections |
| **5-P** | 5KC1513000 | Parallel, 5 sections |
| **6-P** | 5KC1543000 | Parallel, 6 sections |

*Include body, seals, rings and load check valves.*

### 2. Inlet reliaf options *page 10*

*Standard setting is referred to 10 l/min flow.*

| TYPE | CODE | DESCRIPTION |
|---|---|---|
| **SV** | XTAP526340 | Valve blanking plug |
| VMD10/1: direct differential pressure relief valve type K (standard) | | |
| **(KG2-80)** | 5KIT110112 | Range 20 to 63 bar **/** *290 to 900 psi* standard setting 40 bar **/** *580 psi* |
| **(KG3-120)** | 5KIT110113 | Range 63 to 200 bar / *900 to 2900 psi* taratura standard 120 bar / *1750 psi* |
| **(KG4-220)** | 5KIT110114 | Range 180 to 315 bar / *2600 to 4600 psi* standard setting 220 bar / *3200 psi* |
| VMD10/1: direct pressure relief valve type Y | | |
| **(YG1-80)** | 3XCAR110211 | Range 63 to 125 bar / *900 to 1800 psi* standard setting 80 bar **/** *1150 psi* |
| **(YG2-125)** | 3XCAR110212 | Range100 to 160 bar **/** *1450 to 2300 psi* tandard setting 125 bar / *1800 psi* |
| **(YG3-175)** | 3XCAR110213 | Range 125 to 250 / *1800 to 3600 psi* standard setting 175 bar / *2500 psi* |
| **(YG4-220)** | 3XCAR110214 | Range 200 to 315 / *2900 to 4600 psi* standard setting 220 bar / *3200 psi* |
| VMP10/1: pilot pressure relief valve type X | | |
| **(XG-125)** | X006211120 | Range 25 to 315 bar / *360 to 4600 psi* standard setting 120 bar / *1750 psi* |

NOTE (*****) - *Items are referred to **BSP** thread.*

# Inlet relief options

## Direct differential pressure relief vave

**VMD10 ( K G 3 - 120 )**

- 120 — Standard setting in bar (for value see page 8)
- 3 — Adjustable spring type **(2, 3, 4)**.
- G — Adjustment type **(G, H)**

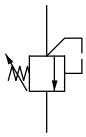

### Adjustment type

**G:** *with screw*

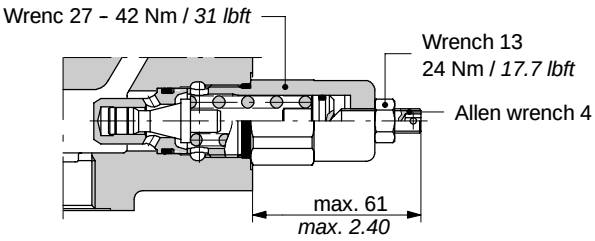


**H:** *valve set and locked*

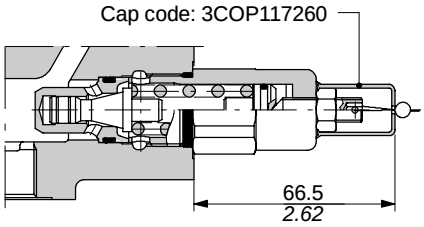


### Performance data

**Spring nr. 2 (green band)**

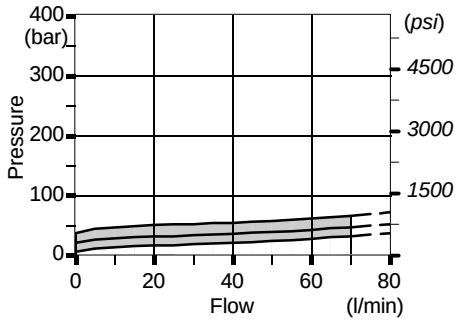


**Spring nr. 3 (blue band)**

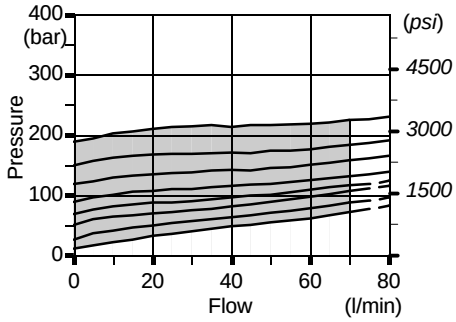


**Spring nr. 4 (red band)**

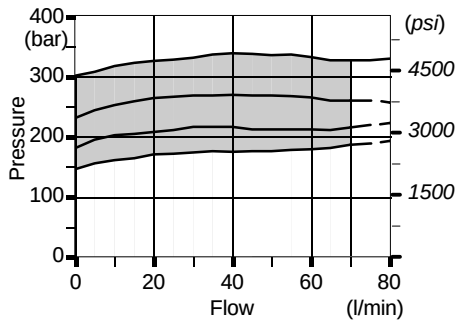


**Time response**

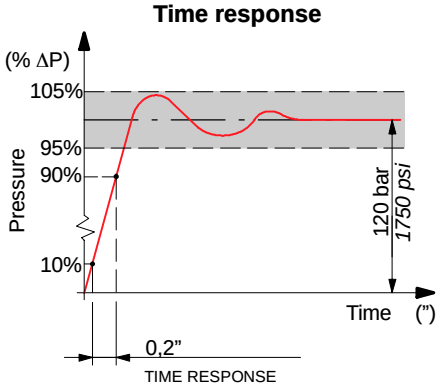

## Spool options

### Type 1

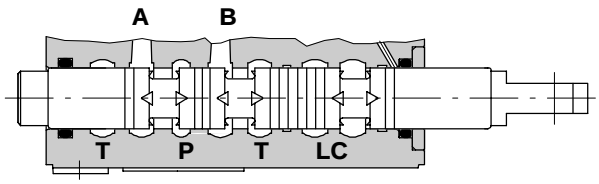


P → A  B → T

▶ stroke:
+ 7 mm / *0.28 in*

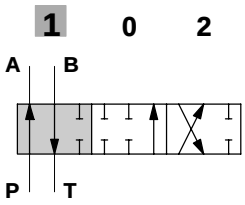


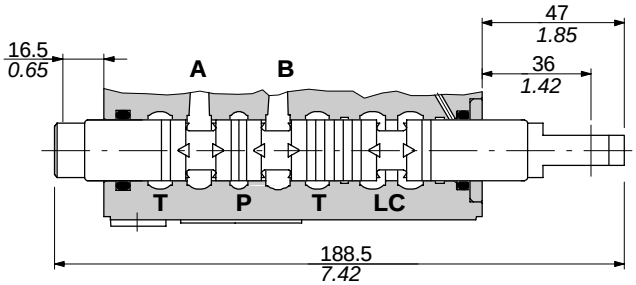


P-A-B-T closed, with flow through line (LC) open

◀ ▶

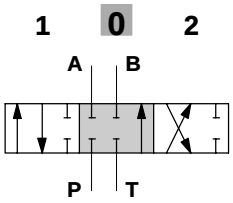


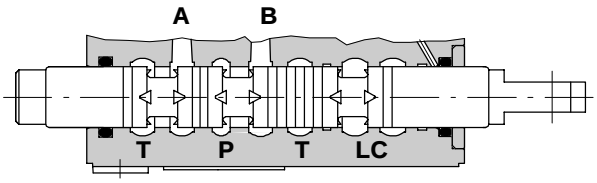


P→ B  A → T

◀ stroke:
- 7 mm / *0.28 in*

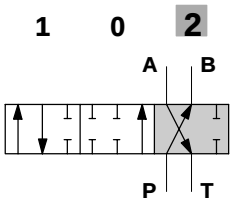


### Performance data

**Spool metering P→A(B)**

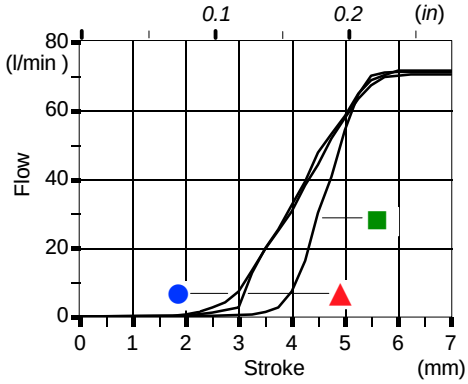


**Qin = 70 l/min**

- P(on ports) = 63bar/*900psi*
- P(on ports) = 100bar/*1450psi*
- P(on ports) = 250bar/*3600psi*

**Spool metering A(B)→T**

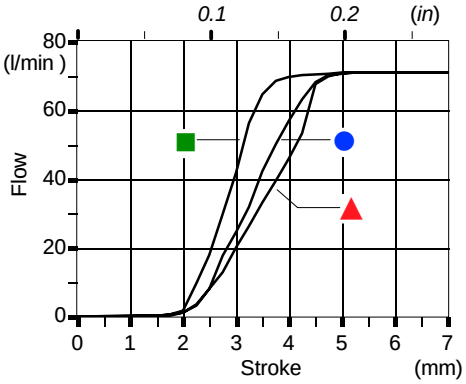

## "A" side spool positioners

### Tipo 7FC with friction

With sensor in neutral position

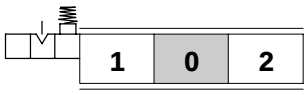


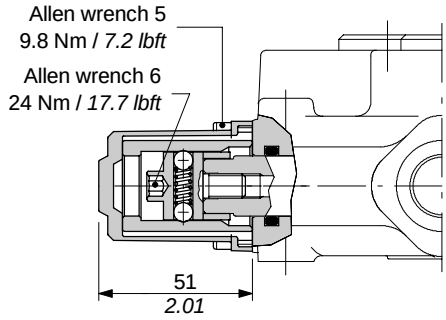


### With spring return in neutral position

#### 8 kit

It's supplied with standard spring type D (see force-stroke diagram) and available with lighter spring type C (**8MC** code: **5V08210000**) or heavier type E (**8ME** code: **5V08410000**).

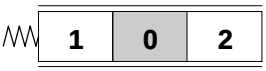


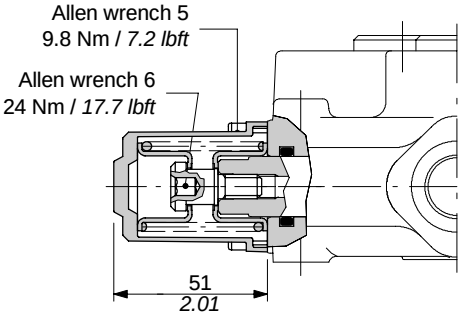


**Force-stroke diagram**

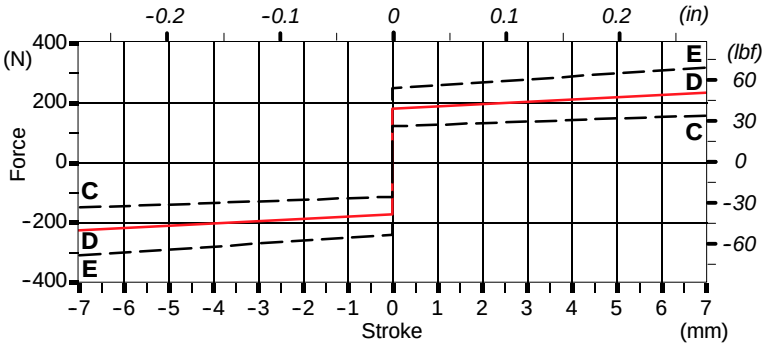


#### 8D kit

Spool end joint code **XPER318500**, is available on request in order to screw onto pin.

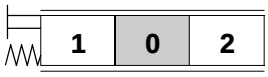


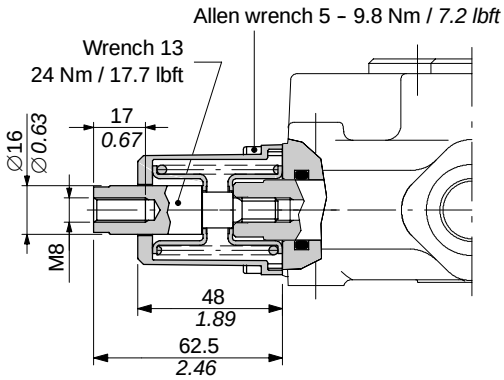


Spool end joint dimensions

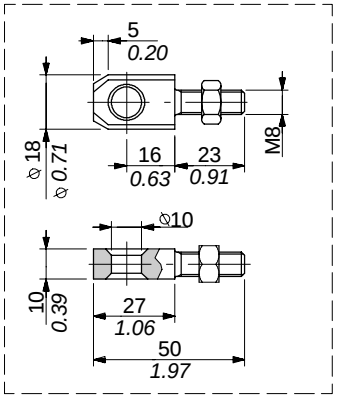

## Outlet port options

It's possible to have open center, closed center and carry-over.
Unloader valves are available: these valves need special bodies with appropriate cavity on lateral outlet port, the tank connection T must be on top.

### AET: open center (standard)

See page 6

### AE: with carry-over sleeve

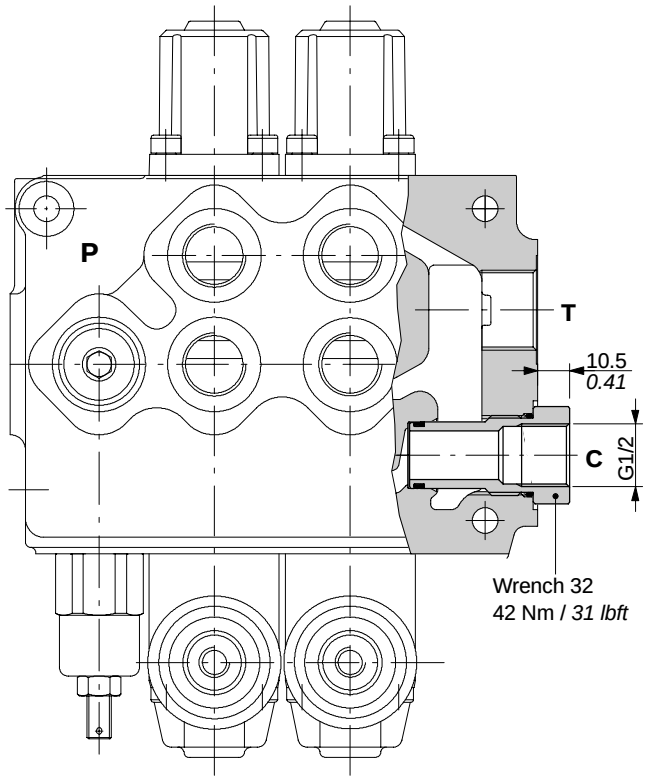


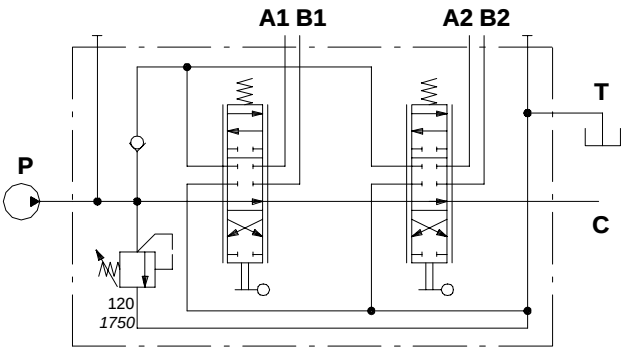


Description example:
SD11/2-P(KG3-120)/18L/18L/**AE**

### AEK: closed center

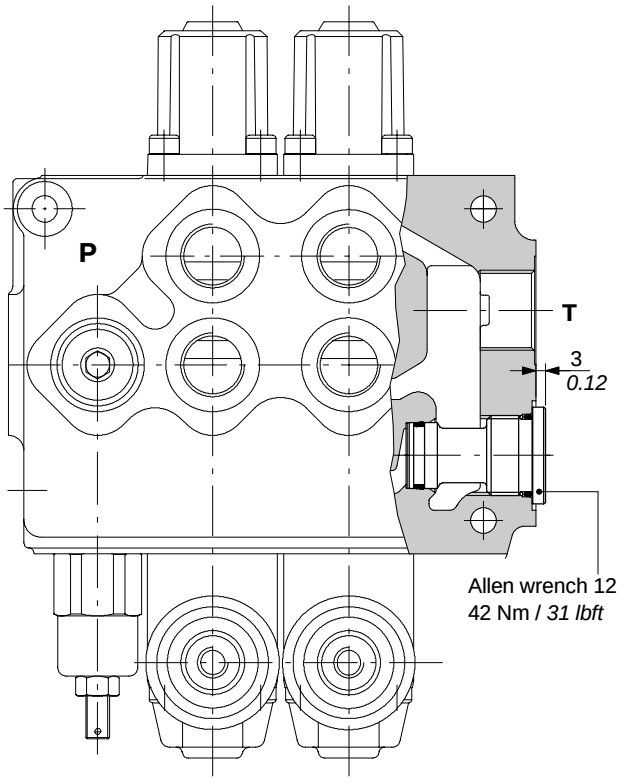


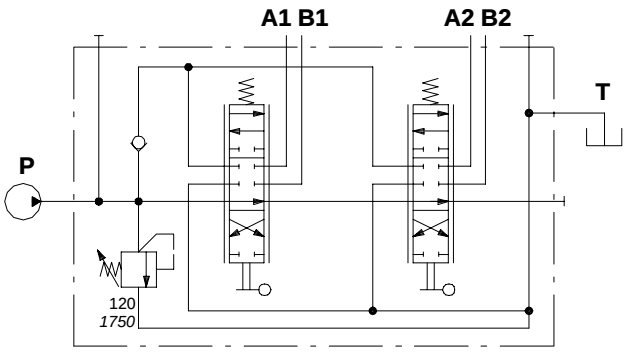


Description example:
SD11/2-P(KG3-120)/18L/18L/**AEK**