Working conditions

This catalogue shows technical specifications and diagrams measured with mineral oil of 46 mm^2/s - *46 cSt* viscosity at 40°C temperature.

Nominal flow rating		70 l/min	
Operating pressure (maximum)	*parallel circuit*	315 bar	*4600 psi*
	series circuit	250 bar	*3600 psi*
Max. back pressure	*on outlet **T***	25 bar	*360 psi*
Internal leakage A(B)→T	*Δp=100 bar - 1450 psi, fluid and valve at 40°C*	3 cm^3/min	*0.18 in^3/min*
Fluid		Mineral base oil	
Fluid temperature	*with NBR seals*	from -20°C to 80°C	
	with FPM (VITON) seals	from -20°C to 100°C	
Viscosity	*campo di lavoro*	from 15 to 75 mm^2/s	*from 15 to 75 cSt*
	minima	12 mm^2/s	*12 mm^2/s*
	massima	400 mm^2/s	*400 mm^2/s*
Max level of contamination		19/16 - ISO 4406	*19/16 - ISO 4406*
Ambient temperature for working conditions	*with mechanical control*	from -40°C to 60°C	
	with hydraulic, pneumatic controls	from -30°C to 60°C	
	with electric controls	from -20°C to 50°C	

NOTE - *For different conditions please contact Sales Dept.*

Standard threads

REFERENCE STANDARDS

		BSP	UN-UNF	METRIC	NPTF
THREAD ACCORDING TO		ISO 228/1	ISO 263	ISO 262	ANSI B1.20.3
		BS 2779	ANSI B1.1 unified		
CAVITY ACCORDING TO	ISO	1179	11926	9974-1	
	SAE		J1926		J476a
	DIN	3852-2 shape X or Y		3852-1 shape X or Y	

PORTS THREAD

MAIN PORTS	BSP	UN-UNF	METRIC
IInlet **P** and carry-over **C**	G 1/2	7/8-14 (SAE 10)	M18x1.5
Ports **A** and **B**	G 1/2	3/4-16 (SAE 8)	M18x1.5
Outlet **T**	G 3/4	7/8-14 (SAE 10)	M22x1.5
CONTROL PILOT PORTS			
Pneumatic	NPTF 1/8-27	NPTF 1/8-27	NPTF 1/8-27
Hydraulic	G 1/4	9/16-18 (SAE 6)	G 1/4

Ordering codes

Description example:

1st section — following section

SD11 / 2 - P (KG3-120) / 1 8 L / 18L . P3(G3-120) / AET - PSL *

1. 2. 3. 4. 5. 6. 7. 8.

2. Main relief valve setting (bar)

6. Port valve setting (bar)

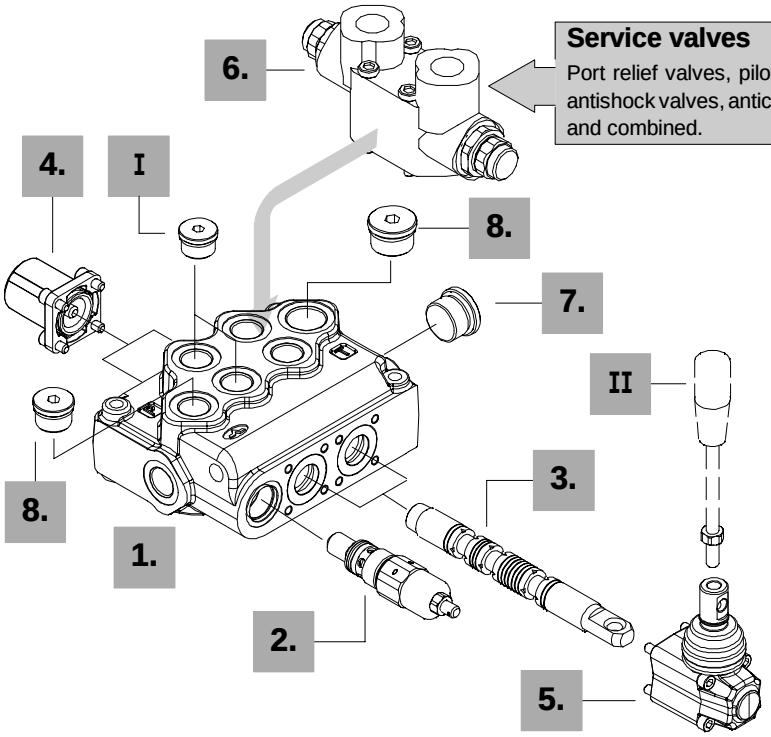

Service valves *page 48*
Port relief valves, pilot check valves, antishock valves, anticavitation valves and combined.

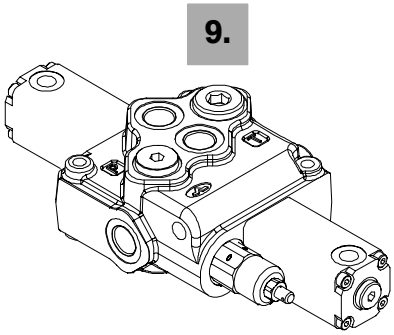

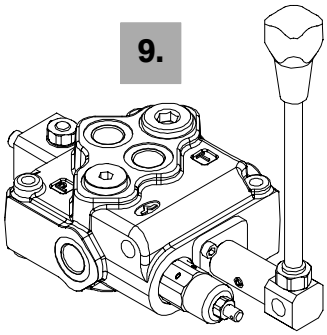

1. Body kit *

TYPE	CODE	DESCRIPTION
1-P	5KC1413000	Parallel, 1 section
2-P	5KC1423000	Parallel, 2 sections
3-P	5KC1443000	Parallel, 3 sections
4-P	5KC1473000	Parallel, 4 sections
5-P	5KC1513000	Parallel, 5 sections
6-P	5KC1543000	Parallel, 6 sections

Include body, seals, rings and load check valves.

2. Inlet reliaf options *page 10*

Standard setting is referred to 10 l/min flow.

TYPE	CODE	DESCRIPTION
SV	XTAP526340	Valve blanking plug
VMD10/1: direct differential pressure relief valve type K (standard)		
(KG2-80)	5KIT110112	Range 20 to 63 bar **/** *290 to 900 psi* standard setting 40 bar **/** *580 psi*
(KG3-120)	5KIT110113	Range 63 to 200 bar / *900 to 2900 psi* taratura standard 120 bar / *1750 psi*
(KG4-220)	5KIT110114	Range 180 to 315 bar / *2600 to 4600 psi* standard setting 220 bar / *3200 psi*
VMD10/1: direct pressure relief valve type Y		
(YG1-80)	3XCAR110211	Range 63 to 125 bar / *900 to 1800 psi* standard setting 80 bar **/** *1150 psi*
(YG2-125)	3XCAR110212	Range100 to 160 bar **/** *1450 to 2300 psi* tandard setting 125 bar / *1800 psi*
(YG3-175)	3XCAR110213	Range 125 to 250 / *1800 to 3600 psi* standard setting 175 bar / *2500 psi*
(YG4-220)	3XCAR110214	Range 200 to 315 / *2900 to 4600 psi* standard setting 220 bar / *3200 psi*
VMP10/1: pilot pressure relief valve type X		
(XG-125)	X006211120	Range 25 to 315 bar / *360 to 4600 psi* standard setting 120 bar / *1750 psi*

NOTE (*****) - *Items are referred to **BSP** thread.*

Inlet relief options

Direct differential pressure relief vave

VMD10 (K G 3 - 120)

- 120 — Standard setting in bar (for value see page 8)
- 3 — Adjustable spring type **(2, 3, 4)**.
- G — Adjustment type **(G, H)**

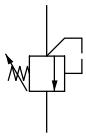

Adjustment type

G: *with screw*

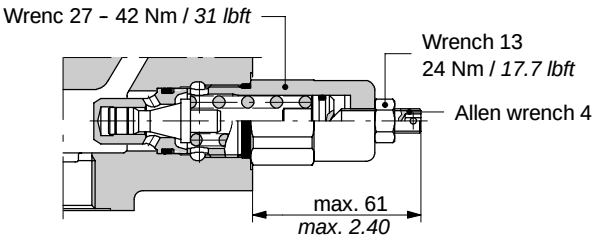

H: *valve set and locked*

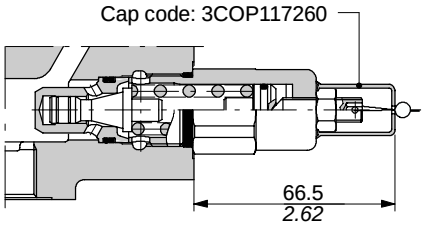

Performance data

Spring nr. 2 (green band)

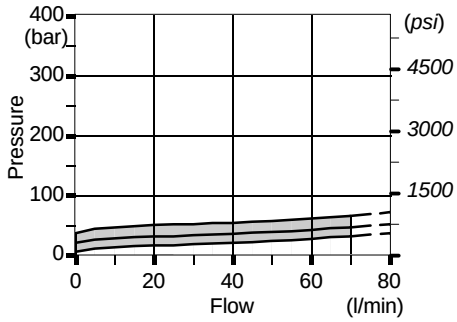

Spring nr. 3 (blue band)

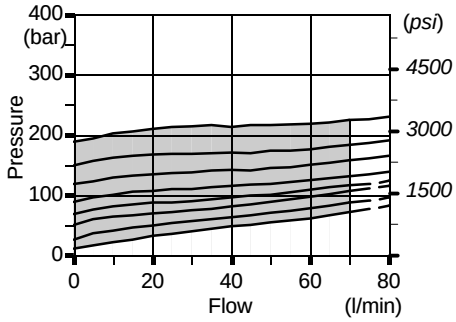

Spring nr. 4 (red band)

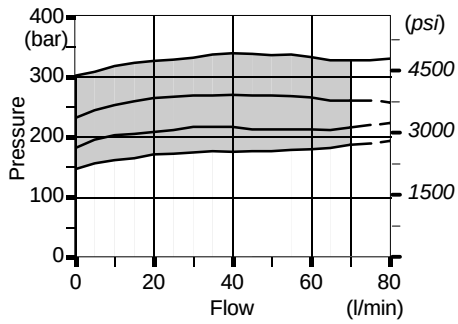

Time response

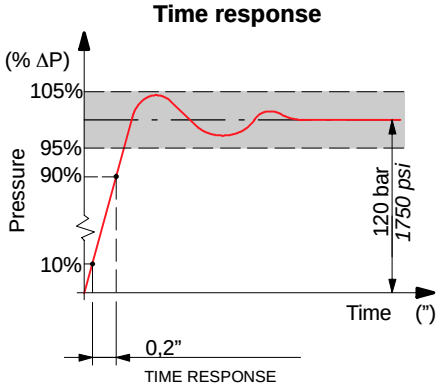

Spool options

Type 1

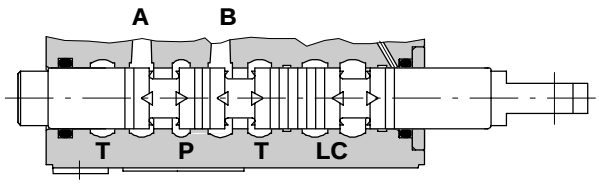

P → A B → T

▶ stroke:
+ 7 mm / *0.28 in*

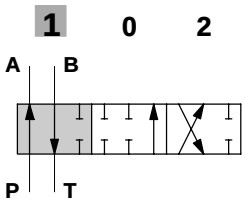

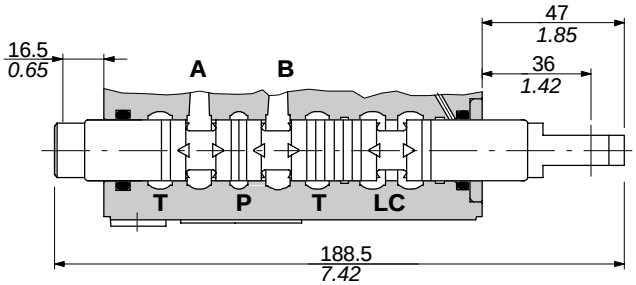

P-A-B-T closed, with flow through line (LC) open

◀ ▶

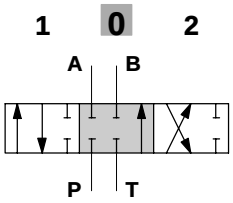

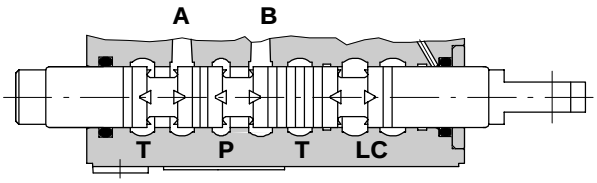

P→ B A → T

◀ stroke:
- 7 mm / *0.28 in*

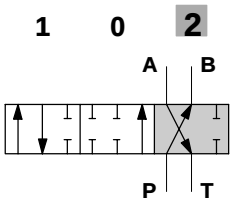

Performance data

Spool metering P→A(B)

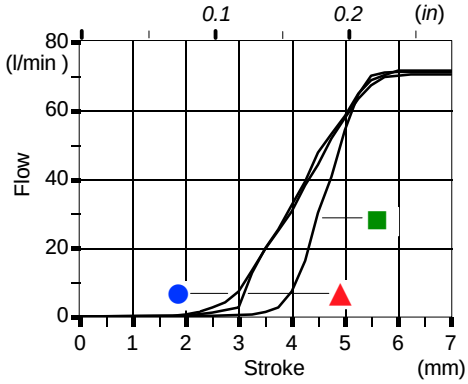

Qin = 70 l/min

- P(on ports) = 63bar/*900psi*
- P(on ports) = 100bar/*1450psi*
- P(on ports) = 250bar/*3600psi*

Spool metering A(B)→T

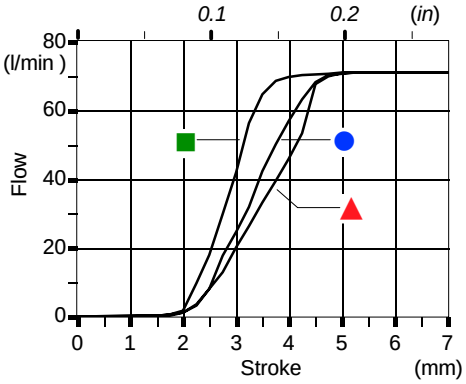

With detent

Kit 11

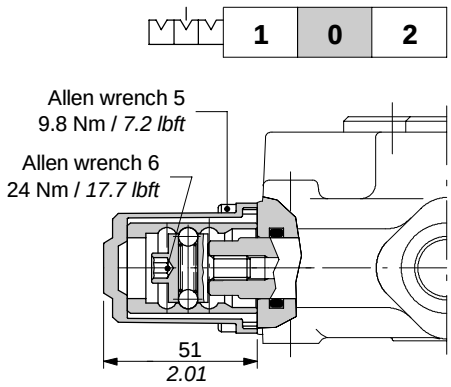

Operating features

Locking and release force . . . . . : 280 N / *63 lbf* ±10%

12 kit

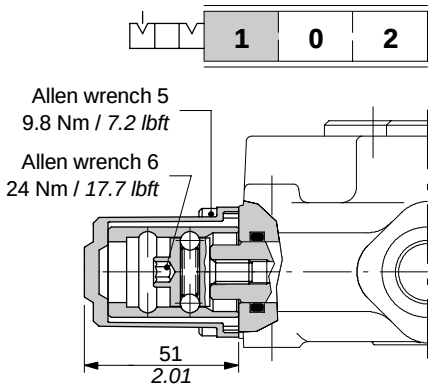

Operating features

Locking and release force . . . . . : 280 N / *63 lbf* ±10%

15 kit

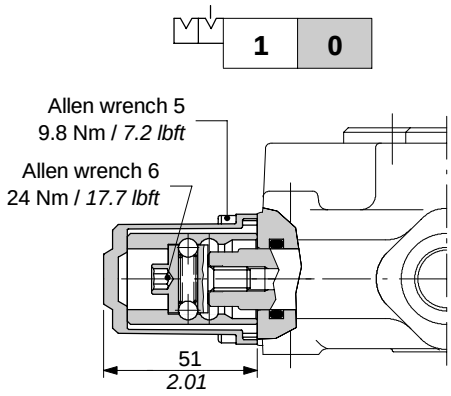

Operating features

Locking and release force . . . . . : 280 N / *63 lbf* ±10%

16 kit

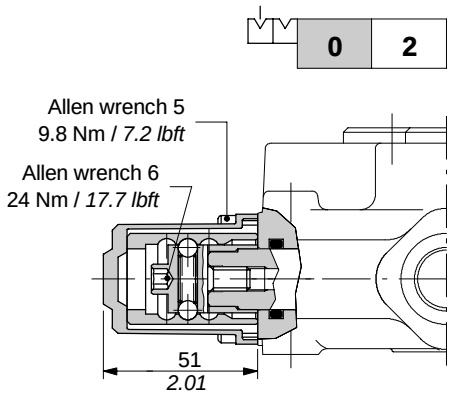

Operating features

Locking and release force . . . . . : 280 N / *63 lbf* ±10%

21 kit

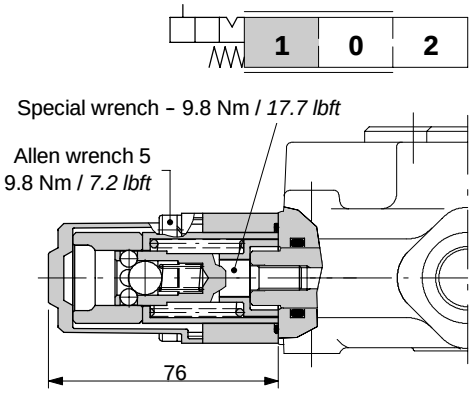

Operating features

Locking and release force . . . . . : N ±10%

Dimensional data

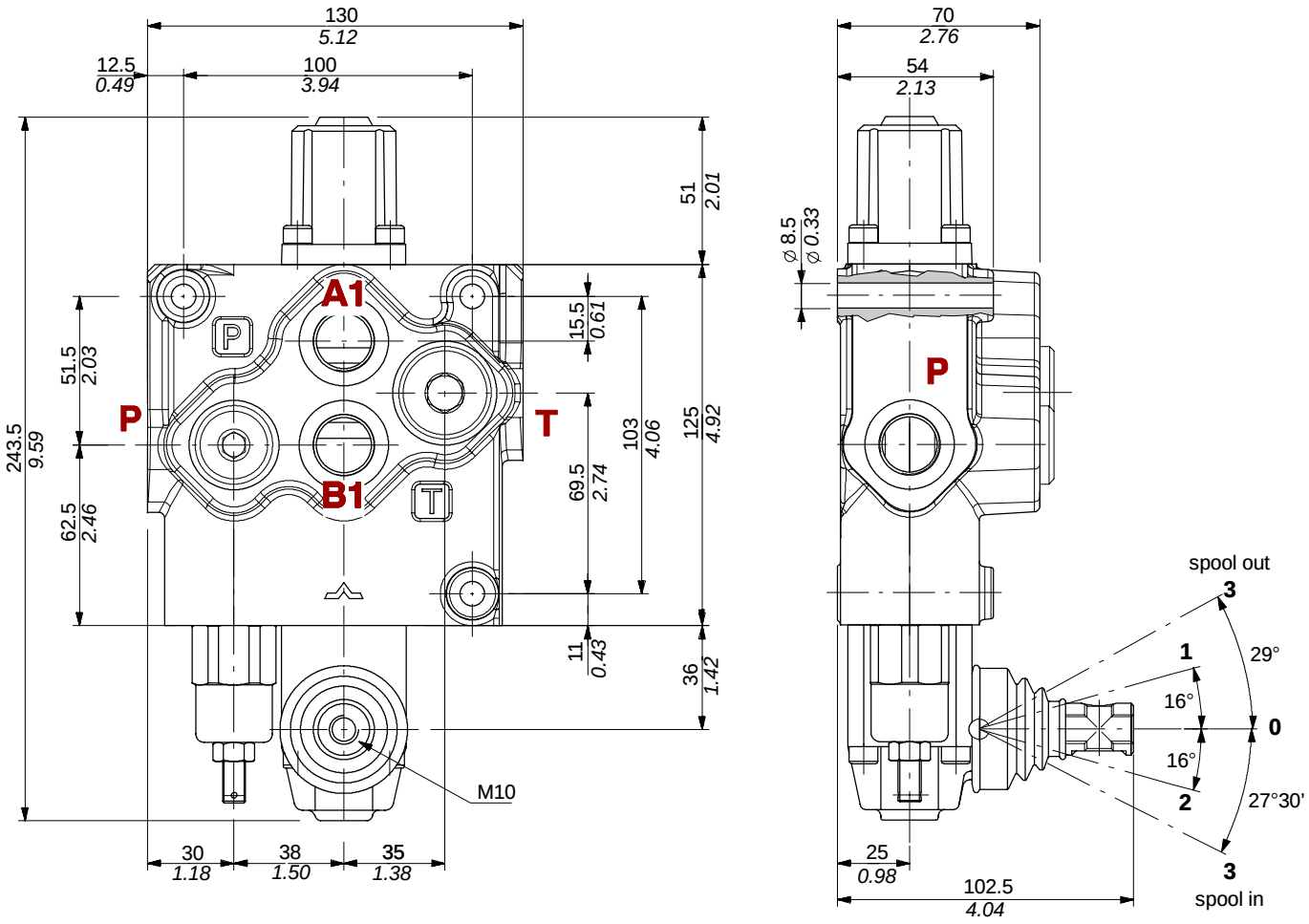

Standard threads

PORTS	BSP (ISO228/1)	UN-UNF (ISO 11926-1)	METRIC (ISO 262)
Inlet **P**	G 1/2	7/8-14 UNF-2B (SAE 10)	M18x1.5
Ports **A** and **B**	G 1/2	3/4-16 UNF-2B (SAE 8)	M18x1.5
Outlet **T**	G 3/4	7/8-14 UNF-2B (SAE 10)	M22x1.5

Hydraulic circuit

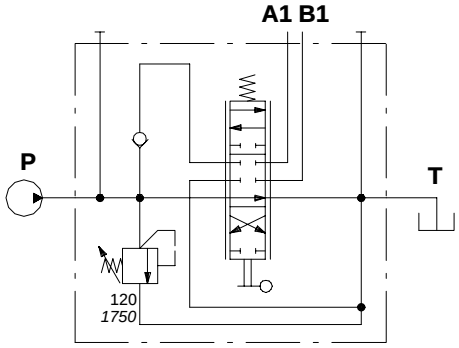

Description axample:

SD11/1-**N**(KG3-120)/18L - Code: 104111001

Performance data

Pressure drop

