

Type PBL
pressure relief valves

• Subplates with pressure relief valve face mounting cetop 3 (6-38) or 5 (10-12)

Technical specifications and diagrams are measured with mineral oil of 46 cSt viscosity at 40°C *(104°F)* temperature.

	PBL 6/VMP 38	PBL 6/VMP 38/5Y	PBL 10/VMP 12
Nominal flow	35 l/min *(9.2 US gpm)*	35 l/min *(9.2 US gpm)*	60 l/min *(16 US gpm)*
Max. pressure		Aluminium body = 210 bar *(3050 psi)* Steel body = 350 bar *(5100 psi)*	
Oil leakage at 80% of max. setting	3 cm^3/min *(0.18 in^3/min)*	1 cm^3/min *(0.06 in^3/min)*	5 cm^3/min *(0.30 in^3/min)*
Fluid		mineral based oil	
Viscosity		from 10 to 200 cSt	
Max. level of contamination		18/16/13 ISO4406	
Fluid temperature		*with NBR seals* from -20°C *(-4°F)* to 80°C *(176°F)*	
Environmental temp. for working conditions		from -40°C *(-40°F)* to 100°C *(212°F)*	
Weight *aluminium*	0.80 kg *(1.76 lb)*	0.80 kg *(1.76 lb)*	1.70 kg *(3.75 lb)*
Weight *steel*	1.98 kg *(4.36 lb)*	1.98 kg *(4.36 lb)*	4.29 kg *(9.46 lb)*

NOTE - For different conditions, please contact Walvoil Sales Dpt.

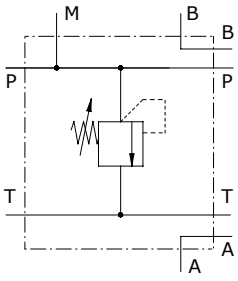

Dimensions

Valve type	P	T	A	B	M
PBL 6/VMP 38	G3/8				G1/4
PBL 6/VMP 38/5Y	G3/8				G1/4

Valve type	P	T	A	B	M
PBL 6/VMP 38/SAE	SAE8				SAE6

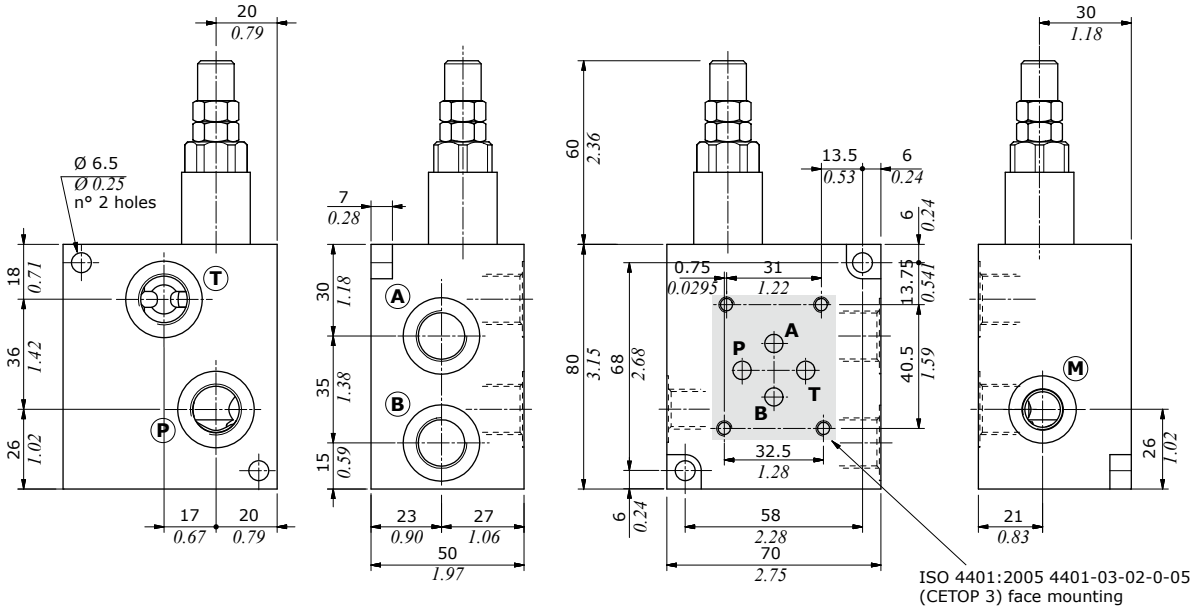

Valve type	P	T	A	B	M
PBL 10/VMP 12	G1/2				G1/4

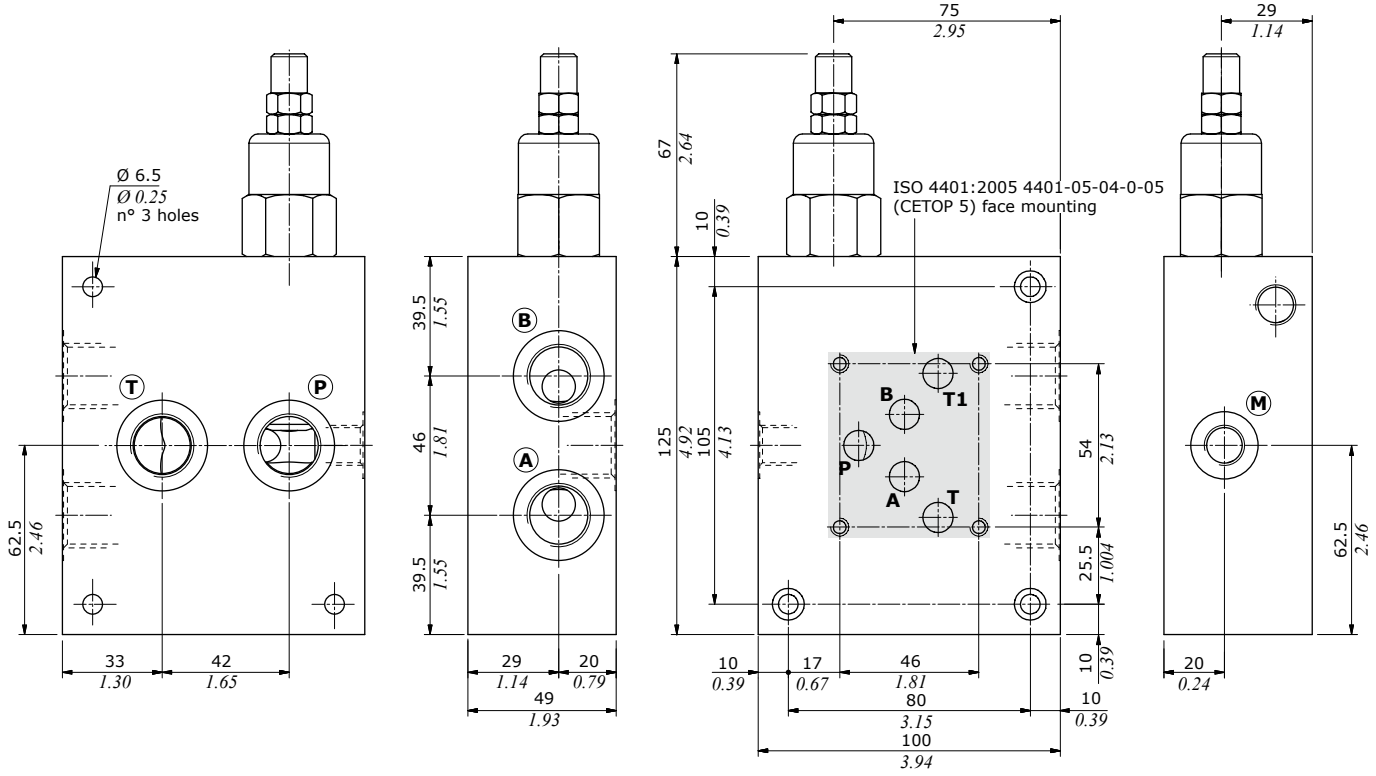

Ordering codes and description composition

Port size 2

PBL 6/VMP 38/5.TS.S

1

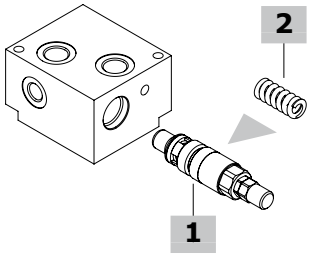

PBL complete valves

With direct acting valves; standard setting is referred to 5 l/min (1.32 US gpm)

Configuration with G3/8 standard thread and ISO 4401:2005 4401-03-02-0-05 (CETOP 3) face mounting

TYPE: **PBL 6/VMP 38/5.TS.S** CODE: 1114021102
DESCRIPTION: Aluminium body, range 50-220 bar *(725-3200 psi).*
Standard setting 160 bar *(2300 psi)*

TYPE: **PBL 6/VMP 38/5.TS.S/ac** CODE: 1114022101
DESCRIPTION: Steel body, as previous one

TYPE: **PBL 6/VMP 38/5Y.TS.S** CODE: 1114021123
DESCRIPTION: Aluminium body, range 140-190 bar *(2030-2750 psi).*
Standard setting 150 bar *(2200 psi)*

Configuration with G1/2 standard thread and ISO 4401:2005 4401-05-04-0-05 (CETOP 5) face mounting

TYPE: **PBL 10/VMP 12/10.TS.S** CODE: 1114031102
DESCRIPTION: Aluminium body, range 50-220 bar *(725-3200 psi).*
Standard setting 160 bar *(2300 psi)*

TYPE: **PBL 10/VMP 12/10.TS.S/ac** CODE: 1114032101
DESCRIPTION: Steel body, as previous one

Configuration with SAE8 standard thread and ISO 4401:2005 4401-03-02-0-05 (CETOP 3) face mounting

TYPE: **PBL 6/VMP 38/5.TS.S/SAE** CODE: 1114021200
DESCRIPTION: Aluminium body, range 50-220 bar *(725-3200 psi).*
Standard setting 160 bar *(2300 psi)*

For other steel body configurations, SAE thread and configurations with FPM (Viton) seals please contact our Sales Dpt.

1 Direct acting pressure relief valves

Standard setting is referred to 5 l/min (1.32 US gpm)

TYPE	CODE	DESCRIPTION
For G3/8 and SAE8 ports configuration		
VMP 5/TS.S	1100520400	Setting range 50-220 bar *(725-3200 psi)* Standard setting 160 bar *(2300 psi)*
VMP 5Y/TS.S	1100520406	Setting range 140-190 bar *(2030-2755 psi)* Standard setting 150 bar *(2200 psi)*
For G1/2 ports configuration		
VMP 10/TS.S	1100530400	Setting range 50-220 bar *(725-3200 psi)*

2 Pressure setting spring

TYPE	CODE	DESCRIPTION
For VMP 5 valve		
TB	3MOL314311	Setting range 5-40 bar *(72.5-580 psi)*
TV	3MOL314330	Setting range 20-80 bar *(290-1160 psi)*
TS	3MOL315330	Setting range 50-220 bar *(725-3200 psi)*
TR	3ML1143600	Setting range 180-350 bar *(2600-5100 psi)*
For VMP 5Y valve		
TB	3MOL314311	Setting range 5-80 bar *(72.5-1160 psi)*
TV	3MOL314330	Setting range 40-150 bar *(580-2200 psi)*
TS	3ML1143400	Setting range 140-190 bar *(2600-5100 psi)*
TR	3MOL315330	Setting range 180-350 bar *(2600-5100 psi)*
For VMP 10 valve		
TB	3MOL316410	Setting range 5-40 bar *(72.5-580 psi)*
TV	3ML1154300	Setting range 20-80 bar *(290-1160 psi)*
TS	3MOL317420	Setting range 50-220 bar *(725-3200 psi)*
TR	3MOL317440	Setting range 180-350 bar *(2600-5100 psi)*

Rating diagrams

PBL 6/VMP 38 pressure vs. flow
Std. setting @ 5 l/min *(1.32 US gpm)*

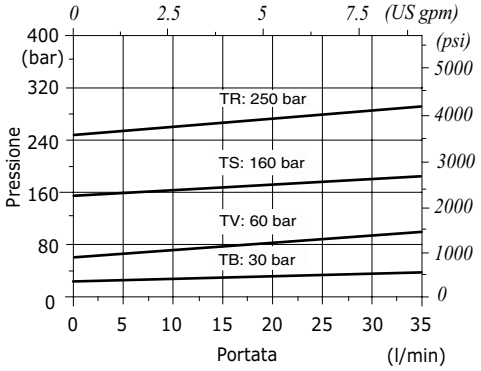

PBL 6/VMP 38/5Y pressure vs. flow
Std. setting @ 5 l/min *(1.32 US gpm)*

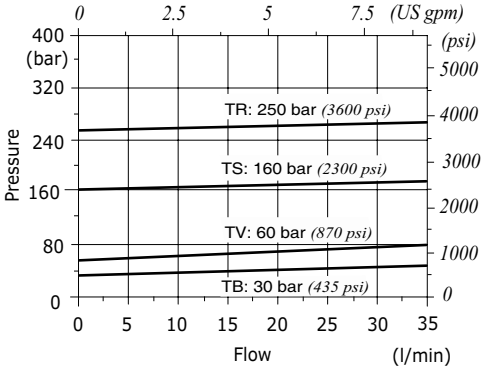

PBL 10/VMP 12 pressure vs. flow
Std. setting @ 5 l/min *(1.32 US gpm)*

