Flow divider 9D0247 (group 2)

Manufacturer: Vivoil

Manufacturer part number / published order designation: 9D0247

Published model: 9D0247

About this compilation

Prepared by Hydmaster from selected manufacturer documentation. Original technical pages follow without cropped drawings, rewritten data or altered units. This cover and index are Hydmaster editorial material, not a manufacturer-issued exact-execution datasheet.

Coverage: supplementary historical manufacturer family reference. Current article specifications remain in its separately linked primary technical sheet. Historical nominal values or example ordering codes do not establish the current exact execution.

Execution notes and conditions

Historical manufacturer family reference (Catalogue of Flow Dividers2000). Current SKU specifications remain in the existing exact DICSA technical sheet; dated nominal/specification values are not inherited.

Several technical/dimension pages explicitly say OUT OF PRODUCTION. They document historical family construction, not current availability or an exact modern delivered execution.

Exact current article is independently proven by the retained DICSA complete model row. Vivoil code tables only explain that existing model; no model combinations are generated.

Page28-30 coding examples, unrelated groups, motor variants and unrelated valve options are excluded.

Source-page index

Source page numbers below are physical pages of each complete original PDF. The original printed page labels and technical content remain unchanged. Compiled page numbers count this cover/index.

Source A: Vivoil Flow Dividers Official

Original pages	Compiled pages	Relevant content
7	2	Historical gear-section operating principle and applications.
21-22	3-4	Historical group2 family technical table and explicit test/fluid conditions; printedOUTOFPRODUCTION notice is retained.; Correct historical group2 DFwithoutvalves hydraulic symbol, port/dimension and section-count configuration table; no motor variant substitution.
25-26	5-6	Original9D/9V composition-code meanings for this existing independently documented article, not generation of a new SKU.; Originalgroup/displacement code matrix linking the already documented code; historical nominal and actual displacement may differ.
33-34	7-8	Historical installation/cleanliness/equal-line/valve-drainage instructions.; Historical connection, breaking-in and phase-correction setting procedure; valve procedure onlyapplies9V.
66	9	Dated01Oct2000 Group2 inlet-plate length correction for1inchBSPinlets; cannot transfer old unchecked envelope dimensions.

Vivoil Oleodinamica Vivolo, Via Larga 15/8L 40138 Bologna Italy tel.+39 051 534834 - fax. +39 051 530032

1 INTRODUCTION

1.1 Summary description of flow dividers

A flow divider is made up of *two or more* modular elements (sections) with gears mechanically linked by an internal shaft that causes them to turn at the same speed.
Unlike multiple pumps, in which the input power is mechanical (shaft connected to a motor), in a flow divider the input power is of a fluid-mechanical nature, i.e. a flow of oil under pressure parallelly supplies the modular elements, which are in turn connected to the hydraulic circuits serving the users.

The portion of flow utilized by each element is solely determined by its nominal flow rate. Therefore, unlike standard static dividers with variable ports, the flow dividers do not cause dissipation and are also much more precise.
The use of flow dividers in a system reduces the number of pumps necessary as well as the associated individual mechanical power takeoffs and complex mechanical couplers (with greater losses).
Leaving aside small losses for the time being, at any given moment the total input power is equal to the sum of the powers supplied by all elements making up the flow divider.
Therefore, if in an interval of time the power required by a hydraulic circuit is equal to zero (inactive drained circuit), the power supplied by the element feeding that circuit becomes available for the other elements, which may use it in their own circuits, also operating at higher pressures than the intake pressure.

1.2 Most frequent applications of flow dividers:

1.2.1 Supply of two or more independent hydraulic circuits by means of a single pump, with an overall flow rate equal to the sum of the flow rates.

Examples of this kind of application:

- lifting platforms and bridges;
- hydraulic bending presses and shearing machines;
- hoisting of freight containers;
- lubrication systems;
- hydraulic opening / closing of gates;
- automatic hydraulically-driven machines;
- actuation of formwork for construction;
- wood processing machinery;
- conveyance of trolleys driven by hydraulic cylinders or motors;
- equipment for the food industry;
- military installations.

KV-2DF

FLOW DIVIDER

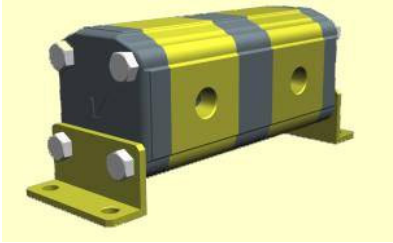

KV-2DFV

FLOW DIVIDER WITH PHASE CORRECTION VALVES

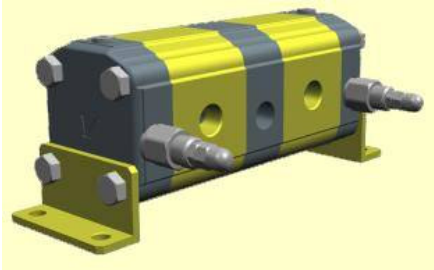

KV-2DF+2M

FLOW DIVIDER WITH MOTOR

KV-2DFV+2M

FLOW DIVIDER WITH VALVES AND MOTOR

TYPE	Displacement cm3/rev.	Flow rate of one element l/min.			Number of gear revolutions rpm			D P (*) bars	MAX Pressure bars		Weight kg
		Min.	Rec.	Max	Min.	Rec.	Max		P1	P2	
KV-2DF 2DFV /4	4.2	4.8	7.6	10	1200	1800	2500	50	210	260	2.200
KV-2DF 2DFV /6	6	7.2	10.8	15	1200	1800	2500	50	210	260	2.300
KV-2DF 2DFV /9	8.4	10.8	15.1	22.5	1200	1800	2500	50	210	260	2.400
KV-2DF 2DFV /11	10.8	13.2	19.4	27.5	1200	1800	2500	50	210	260	2.500
KV-2DF 2DFV /14	14.4	16.8	25.9	35	1200	1800	2500	40	200	240	2.700
KV-2DF 2DFV /17	16.8	20.4	30.2	42.5	1200	1800	2500	40	200	240	2.800
KV-2DF 2DFV /19	19.2	22.8	34.6	47.5	1200	1800	2500	40	190	230	2.900
KV-2DF 2DFV /22	22.8	26.4	41	55	1200	1800	2500	40	180	220	3.050
KV-2DF 2DFV /26	25.2	31.2	45.4	65	1200	1800	2500	40	160	200	3.150
KV-2DF 2DFV /30	30	36	54	75	1200	1800	2500	30	160	190	3.400
KV-2DF 2DFV /34	34.2	40.8	61.6	85	1200	1800	2500	30	140	170	3.600
KV-2DF 2DFV /40	39.6	48	71.3	100	1200	1800	2500	30	130	160	3.800

(*) Max. pressure difference between the various sections

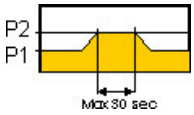

P1 = Operating pressure
P2 = Peak pressure

The flow division error between one element and another is <= 3%

Provided that the values of the table and the data indicated below are complied with
Ambient temperature: -10°c ÷ +60°c
Oil temperature: +30°c ÷ +60°c
Mineral-base hydraulic oil hlp, hv (din 51524)
Oil viscosity 20 ÷ 40 cSt
Oil filtering 10 ÷ 25 µ

DIVISORI DI FLUSSO Serie Giallo
FLOW DIVIDERS Yellow series

ViVOLO BOLOGNA ITALY

Web address: www.vivoil.com

Gruppo - Group 2

VIVOIL OLEODINAMICA VIVOLO Via Larga 15/8L 40138 Bologna Italy tel +39 051 534834 fax +39 051 530032

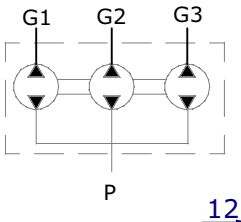

KV-2DF

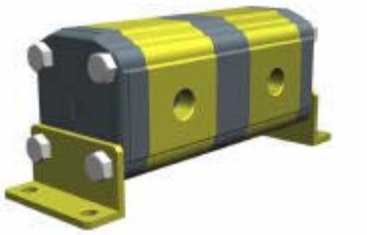

TIPO/Type	A	G (OUT)
KV-2DF/4	47	1/2" BSPP
KV-2DF/6	50	1/2" BSPP
KV-2DF/9	54	1/2" BSPP
KV-2DF/11	58	1/2" BSPP
KV-2DF/14	64	1/2" BSPP
KV-2DF/17	68	1/2" BSPP
KV-2DF/19	72	1/2" BSPP
KV-2DF/22	78	1/2" BSPP
KV-2DF/26	82	3/4" BSPP
KV-2DF/30	90	3/4" BSPP
KV-2DF/34	97	3/4" BSPP
KV-2DF/40	106	3/4" BSPP

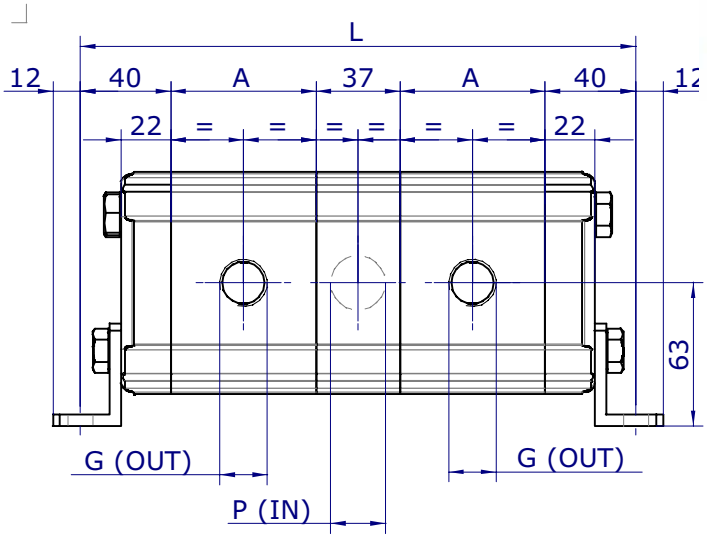

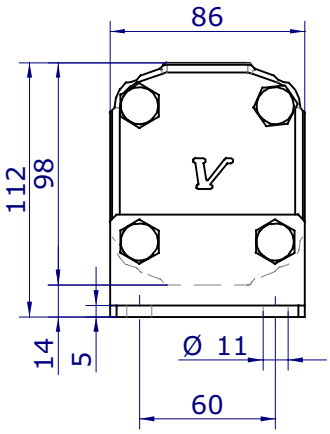

TIPO Type	NUMERO DI ELEMENTI CHE COMPONGONO IL DIVISORE / *QUANTITY OF ELEMENTS COMPOSING THE DIVIDER*														
	2	3	4	5	6	7	8	9	10	11	12	13	14	15	16
2DF / 4	1 x 1/2"	1 x 1/2"	1 x 3/4"	1 x 3/4"	1 x 3/4"	2 x 1/2"	2 x 3/4"	2 x 3/4"	2 x 3/4"	2 x 3/4"	2 x 3/4"	3 x 3/4"	3 x 3/4"	3 x 3/4"	3 x 3/4"
2DF / 6	1 x 1/2"	1 x 3/4"	1 x 3/4"	1 x 3/4"	1 x 3/4"	2 x 1/2"	2 x 3/4"	2 x 3/4"	2 x 3/4"	2 x 3/4"	2 x 3/4"	3 x 3/4"	3 x 3/4"	3 x 3/4"	3 x 3/4"
2DF / 9	1 x 3/4"	1 x 3/4"	1 x 3/4"	1 x 3/4"	1 x 3/4"	2 x 3/4"	2 x 3/4"	2 x 3/4"	2 x 3/4"	2 x 3/4"	2 x 3/4"	3 x 3/4"	3 x 3/4"	3 x 3/4"	3 x 3/4"
2DF / 11	1 x 3/4"	1 x 3/4"	1 x 3/4"	1 x 1"	1 x 1"	2 x 3/4"	2 x 3/4"	2 x 3/4"	2 x 3/4"	2 x 3/4"	2 x 3/4"	3 x 3/4"	3 x 3/4"	3 x 3/4"	3 x 3/4"
2DF / 14	1 x 3/4"	1 x 3/4"	1 x 3/4"	1 x 1"	1 x 1"	2 x 3/4"	2 x 3/4"	2 x 3/4"	2 x 3/4"	2 x 3/4"	2 x 3/4"	3 x 3/4"	3 x 3/4"	3 x 3/4"	3 x 3/4"
2DF / 17	1 x 3/4"	1 x 3/4"	1 x 3/4"	1 x 1"	1 x 1"	2 x 3/4"	2 x 3/4"	2 x 3/4"	2 x 3/4"	2 x 3/4"	2 x 3/4"	3 x 3/4"	3 x 3/4"	3 x 3/4"	3 x 3/4"
2DF / 19	1 x 3/4"	1 x 1"	1 x 1"	1 x 1"	1 x 1"	2 x 3/4"	2 x 3/4"	2 x 1"	2 x 1"	2 x 1"	2 x 1"	3 x 1"	3 x 1"	3 x 1"	3 x 1"
2DF / 22	1 x 3/4"	1 x 1"	1 x 1"	1 x 1"	2 x 1"	2 x 1"	2 x 1"	2 x 1"	2 x 1"	2 x 1"	2 x 1"	3 x 1"	3 x 1"	3 x 1"	3 x 1"
2DF / 26	1 x 1"	1 x 1"	1 x 1"	2 x 1"	2 x 1"	2 x 1"	2 x 1"	2 x 1"	2 x 1"	2 x 1"	2 x 1"	3 x 1"	3 x 1"	3 x 1"	3 x 1"
2DF / 30	1 x 1"	1 x 1"	2 x 1"	2 x 1"	2 x 1"	2 x 1"	2 x 1"	2 x 1"	2 x 1"	2 x 1"	2 x 1"	3 x 1"	3 x 1"	3 x 1"	3 x 1"
2DF / 34	1 x 1"	1 x 1"	2 x 1"	2 x 1"	2 x 1"	2 x 1"	2 x 1"	2 x 1"	2 x 1"	2 x 1"	2 x 1"	3 x 1"	3 x 1"	3 x 1"	3 x 1"
2DF / 40	1 x 1"	1 x 1"	2 x 1"	2 x 1"	2 x 1"	2 x 1"	2 x 1"	2 x 1"	2 x 1"	2 x 1"	2 x 1"	3 x 1"	3 x 1"	3 x 1"	3 x 1"

L = (n-1) x 37 + 80 + A1 + A2 + A3 +.....+An

n = Numero di elementi del Divisore
n = Number of elements making up Divider

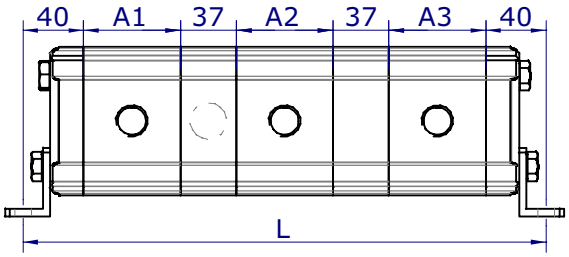

ESEMPIO:
Per ottenere la lunghezza totale (L) di un divisore a tre elementi (n=3), di TIPO KV-2DF/22 x 3
L = (n-1) x 37 + 80 + A1 + A2 + A3 = (3-1) x 37 + 80 + 78 + 78 + 78 = 388 mm

EXAMPLE:
To obtain the total length (L) of a three-element divider (n=3), the element being, TYPE KV-2DF/22 x 3
L = (n-1) x 37 + 80 + A1 + A2 + A3 = (3-1) x 37 + 80 + 78 + 78 + 78 = 388 mm

2.4 General structure of codes

A COMPOSITION CODE identifies a divider made up of elements with identical displacements and valves (if requested). To order a divider with motor you must also indicate the displacement.

9X	NN	CC	MM	LL

9X	**Type of divider**
NN	**Total number of divider elements (from 01 to**
CC	**Displacement code of divider element**
MM	**Displacement code of motor**
LL	**Valve code**

The type of divider may be one of the following:

9D	Flow divider
9V	Flow divider with valves
9G	Flow divider with motor
9N	Flow divider with motor and valves

The displacement of the divider elements may be one of the following:

Table of divider element codes

Cod.	Group 0
02	0.25 cm^3/rev.
04	0.45 cm^3/rev.
05	0.57 cm^3/rev.
06	0.76 cm^3/rev.
07	0.98 cm^3/rev.
09	1.27 cm^3/rev.
11	1.52 cm^3/rev.
13	2.30 cm^3/rev.

Cod.	Group 1
16	0.9 cm^3/rev.
17	1.2 cm^3/rev.
18	1.7 cm^3/rev.
20	2.2 cm^3/rev.
21	2.6 cm^3/rev.
23	3.2 cm^3/rev.
25	3.8 cm^3/rev.
27	4.3 cm^3/rev.
29	4.9 cm^3/rev.
31	5.9 cm^3/rev.
32	6.5 cm^3/rev.
34	7.8 cm^3/rev.
36	9.8 cm^3/rev.

Cod.	Group 2
41	4 cm^3/rev.
43	6 cm^3/rev.
45	9 cm^3/rev.
47	11 cm^3/rev.
49	14 cm^3/rev.
51	17 cm^3/rev.
53	19 cm^3/rev.
55	22 cm^3/rev.
57	26 cm^3/rev.
59	30 cm^3/rev.
61	34 cm^3/rev.
61	40 cm^3/rev.

The codes of the valves, if requested, are as follows:

Table of valves codes

VM 25	
Cod.	Group 0
01	20÷140
02	70÷315

VM 50		
Cod.	Group 1	Group 2
01	10÷105 bars	10÷105 bars
02	70÷210 bars	70÷210 bars
03	140÷350	140÷350

Vivoil Oleodinamica Vivolo, Via Larga 15/8L 40138 Bologna Italy tel.+39 051 534834 - fax. +39 051 530032

3 INSTALLATION

3.1 General information

The dividers are very easy to install; you need only to connect the hydraulic pipes to them. However, you should closely abide by to the directions below to avoid subsequent problems.
As we have seen in paragraph 4 of the introduction, the dividers may be equipped with phase correction valves that correct any small errors occurring in the extension or return cycles of the hydraulic cylinders. In order for the valves to perform their function the cylinders must reach the end of their stroke.

3.2 Installation

3.2.1 Preliminary checks and operations

- Make sure that the intake pipes and the pipes connecting the divider to the actuators have adequate sections and are **clean**.
- If dirt (dust, metal shavings, rubber fragments from the pipe unions, etc.) circulates inside the divider, it will prevent the latter from working efficiently.
- The pipes connecting the elements to the various actuators must have the same or very similar lengths. Otherwise they will increase the phase errors between actuators.
- Make sure that the fluid within the system is clean, suitable and has the recommended viscosity as shown in the fluid tables.
- An unsuitable fluid, besides undermining the efficiency of the divider, will also shorten its life.
- In dividers with phase correction valves, every time that the valve opens in an element, the flow of that element goes to be discharged.
- The discharge flow of the valves is conveyed to the outside by means of a drainage outlet to which must be connected a pipe that drains directly into the tank; thus you obtain external drainage.
- By removing the dowel set inside the drainage outlet and installing a plug made of BSP in the same outlet, you will direct the flow to the inlet of the divider, thereby obtaining internal drainage.
  NOTE: In almost all cases external drainage is to be preferred.
  The dowel is always inserted by Vivoil.
  Internal drainage is allowed only in very special cases, on prior consultation with our Technical Department.

Type of Divider	Dowel	Plug
0DFV	M4 H=7	1/4" BSP
1DFV	M6 H=8	3/8" BSP
2DFV	M8 H=10	1/2" BSP

3.2.2 Connection of pipes to the divider.

- Rest the divider on a clean table, preferably with an unpainted metal surface.
- Remove the plastic caps, making sure not to tear them so as to avoid the risk of fragments getting into the divider.
- Screw in the pipe unions by hand and complete the operation by tightening them with a suitable wrench, without using extensions that will increase the force exerted on the unions themselves.

3.3 Breaking in

The flow dividers are tried out one by one in our **test department** to ensure that they perform efficiently.
However, it is important to note that once the divider is connected to the system, it must operate for about an hour before it will reach full efficiency.
During this breaking in period you must also check for any leaks in the pipe unions. Tighten them further as necessary.
After the divider has been broken in, you may control its performance by checking whether the actuators move according to the specifications provided in the engineering design.
Dividers with valves should also be broken in as described above, though in addition you must set the phase correction valves.

3.4 Setting the phase correction valves

The phase correction valves must be set; for this purpose the divider is provided with a 1/8” plugged threaded hole on each element or, on request, a mini pressure tap.

The **valves must be set** one at a time in succession according to the following procedure:

a. place a pressure gauge on the 1/8” BSP hole after removing the plug (DIN 908 5.8 1/8" cylindrical tap with a 10.5 x 14 x 1.5 washer made of soft copper), or on the mini pressure tap of the first of the elements that has a valve to be set;

b. discharge flow through the outlets of all the other elements, start the pump and adjust the valve until the pressure gauge indicates a pressure that is 10-15% lower than the setting of the system's pressure relief valve.

c. unscrew the pressure gauge and replace the plug in the hole, or else screw the cap back on the mini pressure tap;

d. repeat the operation for all the other valves.

BOLOGNA, 01/10/00

SUBJECT: **TECHNICAL COMMUNICATION – GROUP 2 FLOW-DIVIDERS**

Since the month of September 2000 we have modified the thickness of the 1" BSP Inlet plate for Gr.2 Dividers. Therefore, to calculate the length of the Divider, it is necessary to add 7 mm for each 1" Inlet plates to the measure "L", obtained from the formulas indicated in the catalogue.

EXAMPLE: DIVIDER KV2DF/40 X 4

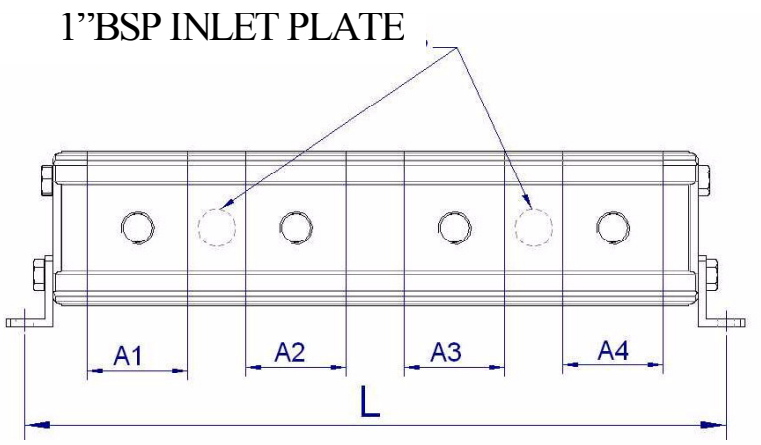

The data for the calculation of the length are in the page "technical data KV-2DF"

Consulting the table of the Inlets, the number and the dimensions of the Inlets are found out, that in our case is 2 X 1", i.e. 2 1" BSP Inlets.

To calculate the length "L" the following formula must be used:
L = (n-1) x 37 + 80 + A1 + A2 + A3 +.....+An

n = number of the elements of the Divider, in the example n = 4.

The values for A1-A2-A3-A4 are, in our case, equal each other and they are obtained from the table.

A1=A2=A3=A4=106 mm

L = (4-1) x 37 + 80 +106+106+106+106= 615 mm, to which 7+7 must be added = 629 mm

NOTE:
In the catalogues with date after 05/10/00 (see paragraph in the index) we have added the following note in the pages of Group 2 technical data.

ATT. Add 7 mm to "L" for each 1" BSP Inlet

Via Larga 15/8L - 40138 BOLOGNA - (ITALY) Tel 051 53.48.34 r.a. - Fax 051 53.00.32 Partita Iva e Cod. Fiscale 03542620376
E-MAIL ADDRESS: vivoil@vivoil.com - WEB ADDRESS:www.vivoil.com