RAS2-NPT VALVOLE A SFERA A 2 VIE
2 WAYS BALL VALVES

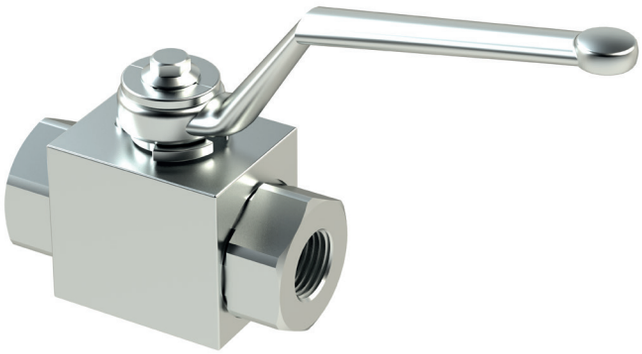

SCHEMA IDRAULICO / HYDRAULIC CIRCUIT

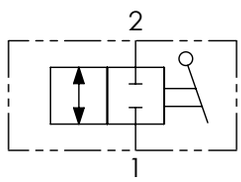

CODICE ORDINAZIONE
ORDERING CODE

01	02	03	04
RAS2		**NPT**	

01	VALVOLE A SFERA A 2 VIE (2 WAYS BALL VALVES)		**RAS2**
02	DIMENSIONE (SIZE)	NPT 1/8	**180**
		NPT 1/4	**140**
		NPT 3/8	**380**
		NPT 1/2	**120**
		NPT 3/4	**340**
		NPT 1	**100**
		NPT 1-1/4	**114**
		NPT 1-1/2	**112**
03	FILETTATURA (THREAD)	NPT	**NPT**
04	OPTIONAL	Fori di fissaggio (Fixing ports)	**P**

DATI TECNICI / TECHNICAL DATA

Olio idraulico - Mineral oil	**ISO 6743/4** (DIN 51524)	
Viscosità olio - Oil viscosity	**15-250 mm²/s** (15 to 250 cSt)	
Classe di contaminazione max Max contamination index	**ISO 4406:1999 Classe 19/17/14**	
Temperatura dell'olio - Oil temperature	**-20°C +80°C**	-4°F + 176°F
Temperatura ambiente - Environment temperature	**-20°C +50°C**	-4°F + 122°F

È indispensabile l'utilizzo di un filtro per proteggere la valvola (filtrazione consigliata 15 µm)
It is necessary a filter use to protect the valve (advised filtration 15 µm)

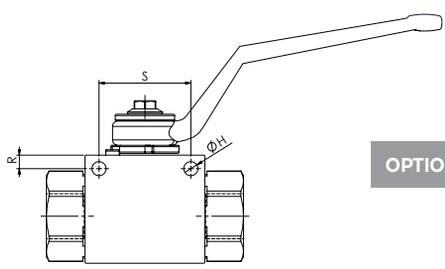

OPTIONAL

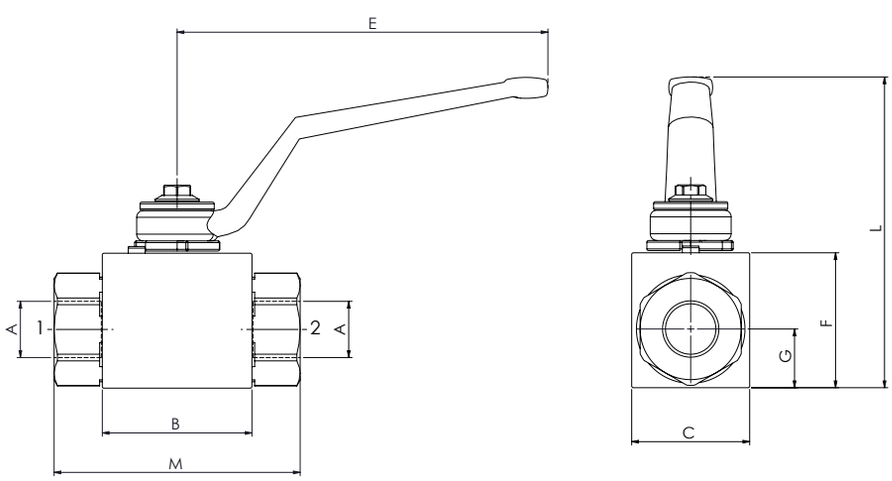

mm (Inches)

CARATTERISTICHE TECNICHE / TECHNICAL CHARACTERISTICS

TIPO TYPE	A	PORTATA MAX MAX FLOW l/min-USgpm	PRESSIONE MAX MAX PRESSURE bar-PSI	B	C	E	F	G	H	L	M	R	S	PESO APPROX APPROX WEIGHT kg-lbt
RAS2180NPT	**NPT 1/8**	**15** (4)	**500** (7250)	**42,4** (1.67)	**30** (1.18)	**110** (4.33)	**35** (1.38)	**14,5** (0.57)	**5,2** (0.20)	**91,5** (3.60)	**71** (2.80)	**4,5** (0.18)	**34** (1.34)	**0,5** (1.1)
RAS2140NPT	**NPT 1/4**	**25** (6.6)												
RAS2380NPT	**NPT 3/8**	**35** (9.2)		**44,4** (175)	**35** (1.38)		**40** (1.57)	**17,5**(0.69)		**96,5** (3.80)	**73** (2.87)			**0,7**(1.5)
RAS2120NPT	**NPT 1/2**	**60** (15.8)		**48,4** (1.91)	**37** (1.46)		**43** (1.69)	**18** (0.71)		**99,5** (3.92)	**83** (3.27)	**5** (0.20)	**36** (1.42)	**0,8** (1.8)
RAS2340NPT	**NPT 3/4**	**100** (26.4)	**400** (5800)	**62,5** (2.46)	**45** (1.77)	**180** (7.09)	**55** (2.17)	**23,5** (0.93)	**6,2** (0.24)	**106,5** (4.19)	**95** (3.74)	**6** (0.24)	**50** (1.97)	**1,5** (3.3)
RAS2100NPT	**NPT 1**	**150** (39.6)	**350** (5075)	**66,5** (2.62)	**55** (2.17)		**65** (2.56)	**29,5** (1.16)		**116,5** (4.59)	**112** (4.41)			**2,3** (5)
RAS2114NPT	**NPT 1-1/4**										**120** (4.72)			
RAS2112NPT	**NPT 1-1/2**										**124** (4.88)			**2,5** (5.5)

I dati presenti nel catalogo possono essere soggetti a variazioni, pertanto **OLEOWEB** si riserva il diritto di apporre modifiche in qualunque momento e senza alcun preavviso.
OLEOWEB reserves the right to modify the products at any time and without notice: the technical data of the catalogue can consequently change.