# Oleodinamica 2MP SVCP-S12-TS2-N-0-000 Normally open Solenoid Cartridge Valve

Manufacturer: Oleodinamica 2MP

Manufacturer part number / published order designation: SVCP-S12-TS2-N-0-000

Published model: SVCP-S12-TS2-N-0-000

## About this compilation

Prepared by Hydmaster from selected manufacturer documentation. Original technical pages follow without cropped drawings, rewritten data or altered units. This cover and index are Hydmaster editorial material, not a manufacturer-issued exact-execution datasheet.

Coverage: selected pages relevant to the identified size and configuration. Other options or neighbouring models retained on an original page apply only where explicitly identified.

## Execution notes and conditions

Actual supplier-selected order reconciled with OEMfamilyfields, not literallyprinted fullcode. Preserve publiceditionconflicts; do not infer omitted electrical fields. Exact supplier title gives140 L/min; current OEM family gives150 L/min. No nominal-flow numericfacet assigned pending suppliedrevision confirmation.

## Source-page index

Source page numbers below are physical pages of each complete original PDF. The original printed page labels and technical content remain unchanged. Compiled page numbers count this cover/index.

## Source A: Current original OEM exact family specification, circuit and execution-field legend; do not attach99pagecatalogue.

| Original pages | Compiled pages | Relevant content |
|---|---|---|
| 84 | 2 | Current original OEM exact family specification, circuit and execution-field legend; do not attach99pagecatalogue. |

## Source B: Earlier manufacturer-authored exact family reference retained by supplier; relevant original page for disclosed edition differences.

Supplemental stage/component reference; not a complete assembly drawing.

| Original pages | Compiled pages | Relevant content |
|---|---|---|
| 1 | 3 | Earlier manufacturer-authored exact family reference retained by supplier; relevant original page for disclosed edition differences. |

# 19.15 SVCP Valvola normalmente aperta, pilotata SAE 10 / SAE 10 normally open, piloted valve

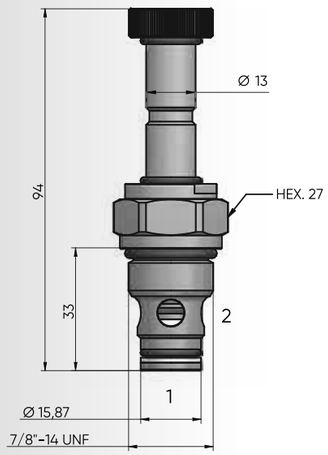


**Schema idraulico** / Hydraulic scheme

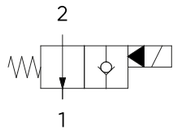


**Bobina** / Coil

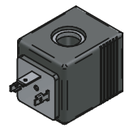

13-39
22 W

pag. 20.0

Quando la bobina è eccitata, la valvola blocca il passaggio da 2 a 1. Quando la bobina è diseccitata, la SVCP consente il flusso libero da 2 a 1, mentre lo blocca da 1 a 2.
When the coil is energized, blocking flow from 2 to 1.
When the coil is de-energized, the SVCP allows flow from 2 to 1, while flow from 1 to 2 is severely restricted.

**Prestazioni** / Performance

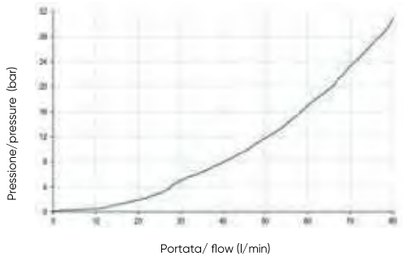


| Caratteristiche tecniche / Technical features | |
|---|---|
| **Pressione massima** / Maximum pressure | **350 bar (5075 psi)** |
| **Portata nominale** / Nominal Flow | **80 l/min (21,1 gpm)** |
| **Temperatura di esercizio** / Operating temperature | **- 20°C /+ 110°C** |
| **Cavità** / Cavity | **C035** |
| **Trafilamento interno** / Internal leakage | **0,25cm³/min @ 30 bar** |
| **Coppia** / Torque | **40 Nm** |
| **Peso** / Weight | **0,16 Kg** |

**Codice d'ordinazione** / Ordering code

**SVCP-S10-TS2-_-_-____-_-_ _ ____**

GUARNIZIONI / SEAL
**N** = NBR

REGOLAZIONE / REGULATION
**0** = SENZA COMANDO MANUALE / NO MANUAL OVERRIDE
**2** = SPINGI E GIRA / PUSH AND TWIST

TENSIONE / VOLTAGE
**000** = SENZA BOBINA / WITHOUT COIL
**D12** = 12 VDC
**D24** = 24 VDC

TIPO CONNETTORE / CONNECTOR TYPE
**0** = SENZA BOBINE / WITHOUT COIL
**D** = DIN 43650 (STD)
**G** = DEUTSCH DT04-2P
**A** = AMP JUNIOR

DIMENSIONE CORPO / SIZE BODY
OMETTERE/OMIT
**200** =BSP3/8"(pag.18.2)
**300** =BSP1/2"(pag.18.2)
**301** =BSP1/2"(pag.18.7)
**401** =BSP3/4"(pag.18.7)

MATERIALE CORPO / MATERIAL BODY
OMETTERE/OMIT
**S** = STEEL
**A** = ALLUMINIUM



# 19.16 SVCP Valvola normalmente aperta, pilotata SAE 12 / SAE 12 normally open, piloted valve

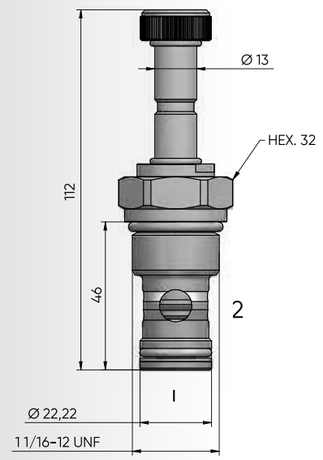


**Schema idraulico** / Hydraulic scheme

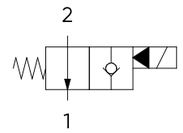


**Bobina** / Coil

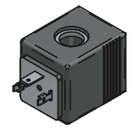

13-39
22 W

pag. 20.0

Quando la bobina è eccitata, la valvola blocca il passaggio da 2 a 1. Quando la bobina è diseccitata, la SVCP consente il flusso libero da 2 a 1, mentre lo blocca da 1 a 2.
When the coil is energized, blocking flow from 2 to 1.
When the coil is de-energized, the SVCP allows flow from 2 to 1, while flow from 1 to 2 is severely restricted.

**Prestazioni** / Performance

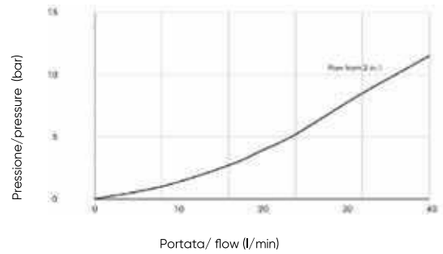


| Caratteristiche tecniche / Technical features | |
|---|---|
| **Pressione massima** / Maximum pressure | **350 bar (5075 psi)** |
| **Portata nominale** / Nominal Flow | **150 l/min (39,62 gpm)** |
| **Temperatura di esercizio** / Operating temperature | **- 20 /+80°C** |
| **Cavità** / Cavity | **C045** |
| **Trafilamento interno** / Internal leakage | **0,25 cc/min** |
| **Coppia** / Torque | **60 Nm** |
| **Peso** / Weight | **0,26 Kg** |

**Codice d'ordinazione** / Ordering code

**SVCP-S12-TS2-_-_-____-_-_ _ ____**

GUARNIZIONI / SEAL
**N** = NBR

REGOLAZIONE / REGULATION
**0** = SENZA COMANDO MANUALE / NO MANUAL OVERRIDE
**2** = SPINGI E GIRA / PUSH AND TWIST
**4** = PRESSIONE SU BOTTONE / PUSH BOTTON

TENSIONE / VOLTAGE
**000** = SENZA BOBINA / WITHOUT COIL
**D12** = 12 VDC
**D24** = 24 VDC

TIPO CONNETTORE / CONNECTOR TYPE
**0** = SENZA BOBINE / WITHOUT COIL
**D** = DIN 43650 (STD)
**G** = DEUTSCH DT04-2P
**A** = AMP JUNIOR

DIMENSIONE CORPO / SIZE DIMENSION
OMETTERE/OMIT
**300** =1/2"BSP(pag.18.2)
**400** =3/4"BSP(pag.18.2)

MATERIALE CORPO / MATERIAL BODY
OMETTERE/OMIT
**S** = STEEL
**A** = ALLUMINIUM

# SVCP

**VALVOLA NORMALMENTE APERTA, PILOTATA SAE 12**
**SAE 12 NORMALLY OPEN, PILOTED VALVE**

OLEODINAMICA 2MP

## CARATTERISTICHE TECNICHE
*TECHNICAL CHARATERISTICS*

| | |
|---|---|
| **Pressione massima** *Maximum pressure* | 350 bar (5075 psi) |
| **Portata nominale** *Nominal Flow* | 150 l/min (39,62 gpm) |
| **Temperatura di esercizio** *Operating temperature* | - 20 /+80°C |
| **Cavità** *Cavity* | C045 |
| **Trafilamento interno** *Internal leakage* | 0,25 cc/min |
| **Coppia** Torque | 60 Nm |
| **Peso** Weight | 0,26 Kg |

## SCHEMA IDRAULICO
*HYDRAULIC SCHEME*

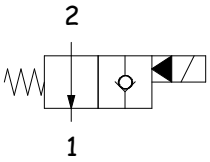


## BOBINA
*COIL*

*13-39*
*22 W*

*pag. 20.0*

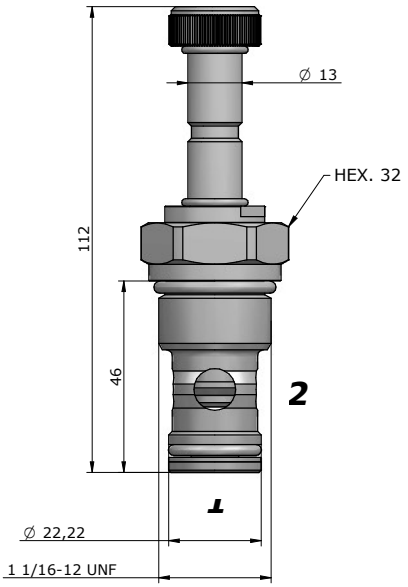


## PRESTAZIONI
*PERFORMANCES*

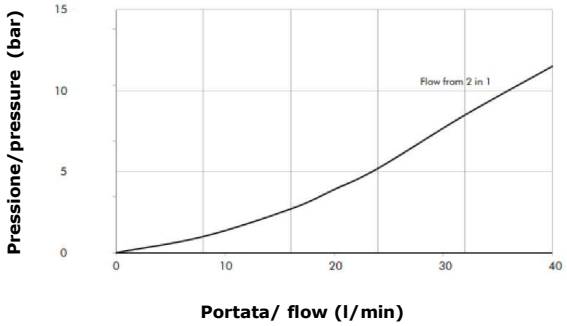


## DESCRIZIONE
*DESCRIPTION*

*Quando la bobina è eccitata, la valvola blocca il passaggio da 2 a 1.*
*Quando la bobina è diseccitata, la SVCP consente il flusso libero da 2 a 1, mentre lo blocca da 1 a 2.*

*When the coil is energized, blocking flow from 2 to 1.*
*When the coil is de-energized, the SVCP allows flow from 2 to 1, while flow from 1 to 2 is severely restricted.*

## CODICE D'ORDINAZIONE
*ORDERING CODE*

*SVCP-S12-TS2-_ - _ - _____ - _ - __ _____*

GUARNIZIONI / SEAL
**N** = NBR

REGOLAZIONE / REGULATION
**0** = SENZA COMANDO MANUALE / NO MANUAL OVERRIDE
**2** = SPINGI E GIRA / PUSH AND TWIST
**4** = PRESSIONE SU BOTTONE / PUSH BOTTON

TENSIONE / VOLTAGE
**000** = SENZA BOBINA / WITHOUT COIL
**D12** = 12 VDC
**D24** = 24 VDC

TIPO CONNETTORE / CONNECTOR TYPE
**0** = SENZA BOBINE / WITHOUT COIL
**D** = DIN 43650 (STP)
**G** = DEUTSCH DT04-2P
**A** = AMP JUNIOR

*DIMENSIONE CORPO / SIZE DIMENSION*
**OMETTERE/OMIT**
**300**=1/2"BSP(pag.18.2)
**400**=3/4"BSP(pag.18.2)

*MATERIALE CORPO MATERIAL BODY*
**OMETTERE/OMIT**
**S** = STEEL
**A** = ALLUMINIUM

Via Nicolò Copernico 12/c-d
29027 Casoni Di Gariga - Podenzano (PC) Italy

www.oleodinamica2mp.it
Tel +39 0523 523231