Oleodinamica 2MP SVCP-S10-TD4-N-0-000 Normally open Solenoid Cartridge Valve

Manufacturer: Oleodinamica 2MP

Manufacturer part number / published order designation: SVCP-S10-TD4-N-0-000

Published model: SVCP-S10-TD4-N-0-000

About this compilation

Prepared by Hydmaster from selected manufacturer documentation. Original technical pages follow without cropped drawings, rewritten data or altered units. This cover and index are Hydmaster editorial material, not a manufacturer-issued exact-execution datasheet.

Coverage: selected pages relevant to the identified size and configuration. Other options or neighbouring models retained on an original page apply only where explicitly identified.

Execution notes and conditions

Actual supplier-selected order reconciled with OEMfamilyfields, not literallyprinted fullcode. Preserve publiceditionconflicts; do not infer omitted electrical fields. The current catalogue page has an editorial inconsistency: its heading and description say SVCD, while its ordering line says SVCP. This profile follows the selected supplier SVCP article and retained SVCP manufacturer sheet; no SVCD equivalence is assumed.

Source-page index

Source page numbers below are physical pages of each complete original PDF. The original printed page labels and technical content remain unchanged. Compiled page numbers count this cover/index.

Source A: Current original OEM exact family specification, circuit and execution-field legend; do not attach99pagecatalogue.

Original pages	Compiled pages	Relevant content
88	2	Current original OEM exact family specification, circuit and execution-field legend; do not attach99pagecatalogue.

Source B: Earlier manufacturer-authored exact family reference retained by supplier; relevant original page for disclosed edition differences.

Supplemental stage/component reference; not a complete assembly drawing.

Original pages	Compiled pages	Relevant content
1	3	Earlier manufacturer-authored exact family reference retained by supplier; relevant original page for disclosed edition differences.

19.23 SVCD Valvola normalmente aperta, pilotata SAE 10 / SAE 10 normally open, piloted valve

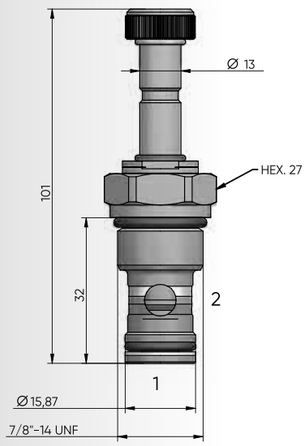

Schema idraulico / Hydraulic scheme

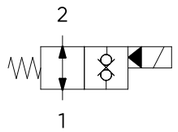

Bobina / Coil

13-39
22 W

pag. 20.0

Quando la bobina è eccitata, la valvola blocca il passaggio in entrambe le direzioni. Quando la bobina è diseccitata, la SVCD consente il flusso libero sia da 2 a 1 che da 1 a 2.
When the coil is energized, blocks flows in both directions.
When the coil is de-energized, the SVCD allows flow from 2 to 1 and from 1 to 2.

Caratteristiche tecniche / Technical features	
Pressione massima / Maximum pressure	350 bar (5075 psi)
Portata nominale / Nominal Flow	70 l/min (18,6 gpm)
Temperatura di esercizio / Operating temperature	- 20°C / +80°C
Cavità / Cavity	C035
Trafilamento interno / Internal leakage	0,5cc/min
Coppia / Torque	40 Nm
Peso / Weight	0,19 Kg

Prestazioni / Performance

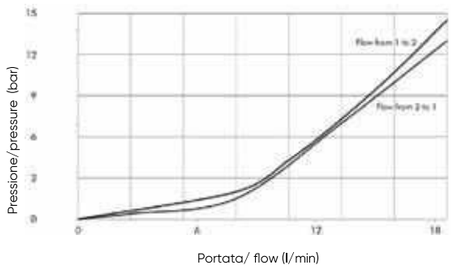

Codice d'ordinazione / Ordering code

SVCP-S10-TD4-__-__-_____-__-_ _____

GUARNIZIONI / SEAL
N = NBR

REGOLAZIONE / REGULATION
0 = SENZA COMANDO MANUALE / NO MANUAL OVERRIDE
2 = SPINGI E GIRA / PUSH AND TWIST
4 = PRESSIONE SU BOTTONE / PUSH BOTTON

TENSIONE / VOLTAGE
000 = SENZA BOBINA / WITHOUT COIL
D12 = 12 VDC
D24 = 24 VDC

TIPO CONNETTORE / CONNECTOR TYPE
0 = SENZA BOBINE / WITHOUT COIL
D = DIN 43650 (STD)
G = DEUTSCH DT04-2P
A = AMP JUNIOR

DIMENSIONE CORPO / SIZE BODY
OMETTERE/OMIT
200 =BSP3/8"(pag.18.2)
300 =BSP1/2"(pag.18.2)
301 =BSP1/2"(pag.18.7)
401 =BSP3/4"(pag.18.7)

MATERIALE CORPO / MATERIAL BODY
OMETTERE/OMIT
S = STEEL
A = ALLUMINUM

19.24 SVCP Valvola normalmente aperta, pilotata SAE 12 / SAE 12 normally open, piloted valve

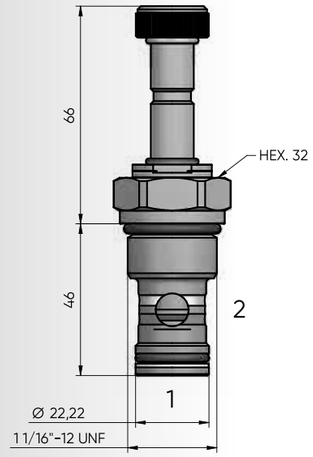

Schema idraulico / Hydraulic scheme

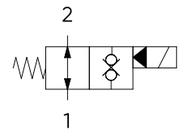

Bobina / Coil

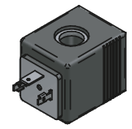

13-39
22 W

pag.20.0

Quando la bobina è eccitata, la valvola blocca il passaggio in entrambe le direzioni. Quando la bobina è diseccitata, la SVCP consente il flusso libero sia da 2 a 1 che da 1 a 2.
When the coil is energized, blocks flows in both directions.
When the coil is de-energized, the SVCP allows flow from 2 to 1 and from 1 to 2.

Caratteristiche tecniche / Technical features	
Pressione massima / Maximum pressure	350 bar (5075 psi)
Portata nominale / Nominal Flow	150 l/min (39,62 gpm)
Temperatura di esercizio / Operating temperature	-20 / +80 °C
Cavità / Cavity	C045
Trafilamento interno / Internal leakage	0,5 cc/min
Coppia / Torque	60 Nm
Peso / Weight	0,26 Kg

Prestazioni / Performance

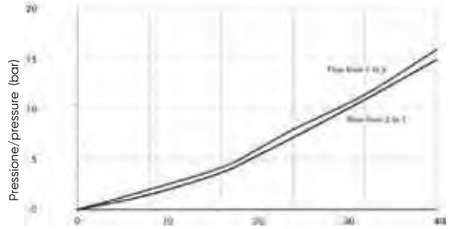

Codice d'ordinazione / Ordering code

SVCP-S12-TD4-__-__-_____-__-_ _____

GUARNIZIONI / SEAL
N = NBR

REGOLAZIONE / REGULATION
0 = SENZA COMANDO MANUALE / NO MANUAL OVERRIDE
2 = SPINGI E GIRA / PUSH AND TWIST
4 = PRESSIONE SU BOTTONE / PUSH BOTTON

TENSIONE / VOLTAGE
000 = SENZA BOBINA / WITHOUT COIL
D12 = 12 VDC
D24 = 24 VDC

TIPO CONNETTORE / CONNECTOR TYPE
0 = SENZA BOBINE / WITHOUT COIL
D = DIN 43650(STD)
G = DEUTSCH DT04-2P
A = AMP JUNIOR

DIMENSIONE CORPO / SIZE DIMENSION
OMETTERE/OMIT
300 =1/2"BSP(pag.18.2)
400 =3/4"BSP(pag.18.2)

MATERIALE CORPO / MATERIAL BODY
OMETTERE/OMIT
S = STEEL
A = ALLUMINUM

SVCP

VALVOLA NORMALMENTE APERTA, PILOTATA SAE 10
SAE 10 NORMALLY OPEN, PILOTED VALVE

OLEODINAMICA 2MP

CARATTERISTICHE TECNICHE
TECHNICAL FEATURES

Pressione massima *Maximum pressure*	350 bar (5075 psi)
Portata nominale *Nominal Flow*	70 l/min (18,6 gpm)
Temperatura di esercizio *Operating temperature*	- 20°C / +80°C
Cavità *Cavity*	C035
Trafilamento interno *Internal leakage*	0,5cc/min
Coppia Torque	40 Nm
Peso Weight	0,19 Kg

SCHEMA IDRAULICO
HYDRAULIC SCHEME

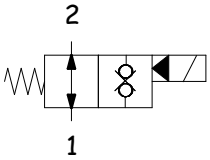

BOBINA
COIL

13-39
22 W

pag. 20.0

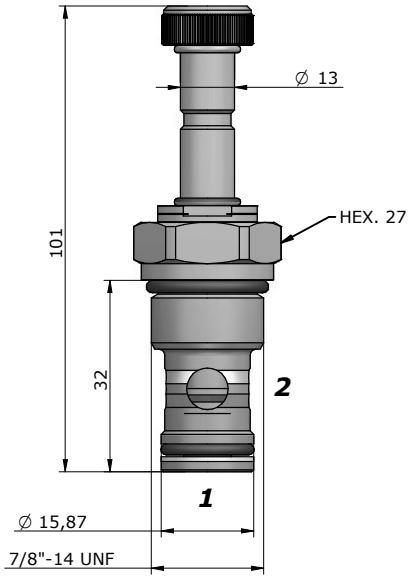

PRESTAZIONI
PERFORMANCES

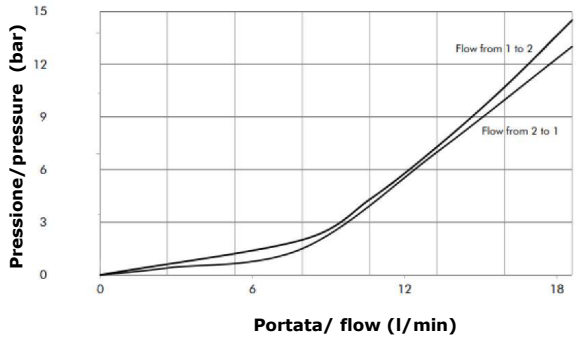

DESCRIZIONE
DESCRIPTION

Quando la bobina è eccitata, la valvola blocca il passaggio in entrambe le direzioni.
Quando la bobina è diseccitata, la SVCP consente il flusso libero sia da 2 a 1 che da 1 a 2.

When the coil is energized, blocks flows in both directions.
When the coil is de-energized, the SVCP allows flow from 2 to 1 and from 1 to 2.

CODICE D'ORDINAZIONE
ORDERING CODE

SVCP-S10-TD4-_ - _ - ____ - _ - __ ____

GUARNIZIONI / SEAL
N = NBR

REGOLAZIONE / REGULATION
0 = SENZA COMANDO MANUALE / NO MANUAL OVERRIDE
2 = SPINGI E GIRA / PUSH AND TWIST
4 = PRESSIONE SU BOTTONE / PUSH BOTTON

TENSIONE / VOLTAGE
000 = SENZA BOBINA / WITHOUT COIL
D12 = 12 VDC
D24 = 24 VDC

TIPO CONNETTORE / CONNECTOR TYPE
0 = SENZA BOBINE / WITHOUT COIL
D = DIN 43650 (STD)
G = DEUTSCH DT04-2P
A = AMP JUNIOR

DIMENSIONE CORPO / SIZE BODY
OMETTERE/OMIT
200=BSP3/8"(pag.18.2)
300=BSP1/2"(pag.18.2)
301=BSP1/2"(pag.18.7)
401=BSP3/4"(pag.18.7)

MATERIALE CORPO / MATERIAL BODY
OMETTERE/OMIT
S = STEEL
A = ALLUMINUM

Via Nicolò Copernico 12/c-d
29027 Casoni Di Gariga - Podenzano (PC) Italy

www.oleodinamica2mp.it
Tel +39 0523 523231