Oleodinamica 2MP ES 06-12-38-2 CETOP 3 parallel manifold

Manufacturer: Oleodinamica 2MP

Manufacturer part number / published order designation: ES0612382

Published model: ES0612382

About this compilation

Prepared by Hydmaster from selected manufacturer documentation. Original technical pages follow without cropped drawings, rewritten data or altered units. This cover and index are Hydmaster editorial material, not a manufacturer-issued exact-execution datasheet.

Coverage: selected pages relevant to the identified size and configuration. Other options or neighbouring models retained on an original page apply only where explicitly identified.

Execution notes and conditions

OEM E_[S/A]06-12-38-[mounting positions01-10]; S=steel, supplier actually offers 2 station(s). Supplier field ES0612382 and visible titleES 06-12-38-2 explicitly name this same selected card, not two models. Illustration is representative. No unsupported body pressure/flow/mass/dimensional limit assigned.

Source-page index

Source page numbers below are physical pages of each complete original PDF. The original printed page labels and technical content remain unchanged. Compiled page numbers count this cover/index.

Source A: Original manufacturer family drawing and execution legend for this observed selected article; use only listed physical page, not99-pagegeneral.

Original pages	Compiled pages	Relevant content
13	2	Original manufacturer family drawing and execution legend for this observed selected article; use only listed physical page, not99-pagegeneral.

1.1 Monoblocco A-B laterali 3/8" P-T 1/2" BSP / Monoblock A-B on side 3/8" P-T 1/2" BSP

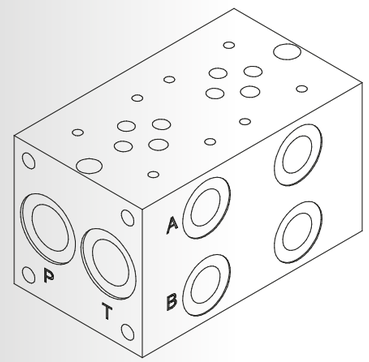

Schema idraulico / Hydraulic scheme

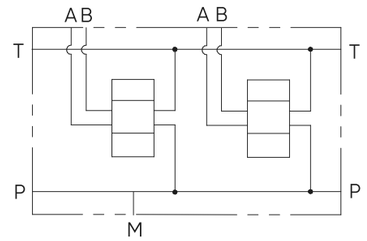

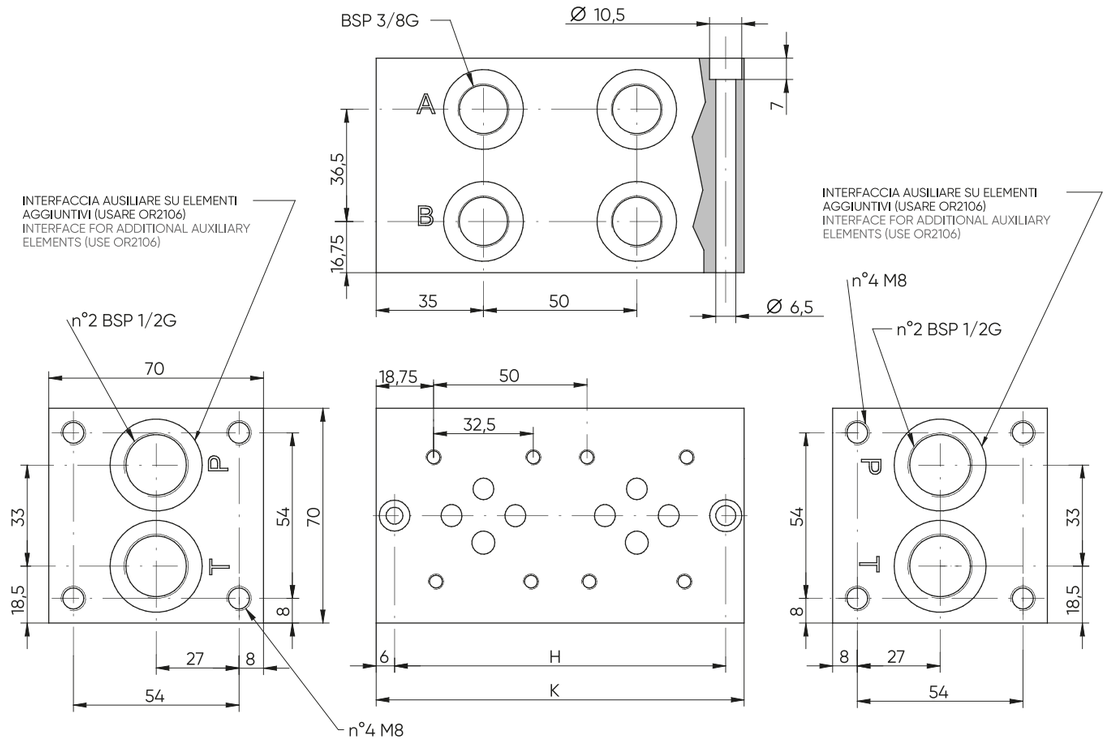

POS	01	02	03	04	05	06	07	08	09	10
H	58	108	158	208	258	308	358	408	458	508
K	70	120	170	220	270	320	370	420	470	520

E_ 06 - 12 - 38 - __

S = STEEL
A = ALUMINIUM

MOUNTING POSITIONS: 01 ÷ 10