Oleodinamica 2MP ES 06-01-14-1 CETOP 3 connection plate

Manufacturer: Oleodinamica 2MP

Manufacturer part number / published order designation: ES0601141

Published model: ES0601141

About this compilation

Prepared by Hydmaster from selected manufacturer documentation. Original technical pages follow without cropped drawings, rewritten data or altered units. This cover and index are Hydmaster editorial material, not a manufacturer-issued exact-execution datasheet.

Coverage: selected pages relevant to the identified size and configuration. Other options or neighbouring models retained on an original page apply only where explicitly identified.

Execution notes and conditions

OEM E_[S]06-01-[14/38]-[tablechoice]; 14=G1/4, choice1=A+B. Supplier fieldES0601141 and visibleES 06-01-14-1 are the same selected card. Illustration is representative. No unsupported body pressure/flow/mass/dimensional limit assigned.

Source-page index

Source page numbers below are physical pages of each complete original PDF. The original printed page labels and technical content remain unchanged. Compiled page numbers count this cover/index.

Source A: Original manufacturer family drawing and execution legend for this observed selected article; use only listed physical page, not99-pagegeneral.

Original pages	Compiled pages	Relevant content
51	2	Original manufacturer family drawing and execution legend for this observed selected article; use only listed physical page, not99-pagegeneral.

12.1 Base di collegamento Cetop 3 con attacchi 1/4" / 3/8" BSP / Cetop 3 sub-plate with 1/4" / 3/8" BSP ports

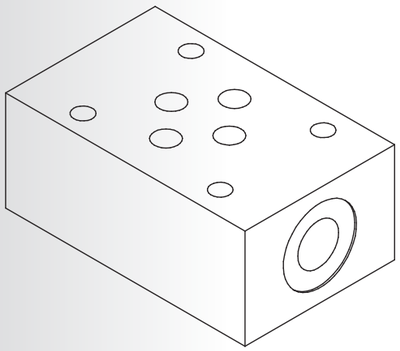

Cod.	Diagrams		"X" 14	"X" 38	"Y" 14	"Y" 38
1	A+B	Standard	22,5	22,5	22,5	22,5
2	A	On request	22,5	22,5	22,5	22,5
3	B	On request	22,5	22,5	22,5	22,5
4	P+T	Standard	28	26	17	19
5	P	On request	28	26	17	19
6	T	On request	28	26	17	19

Nota /Note:

I codici 2, 3, 5 e 6 sono realizzati tappando l'attacco non utilizzato

Codes 2, 3, 5 and 6 are achieved using a plug in the non required port

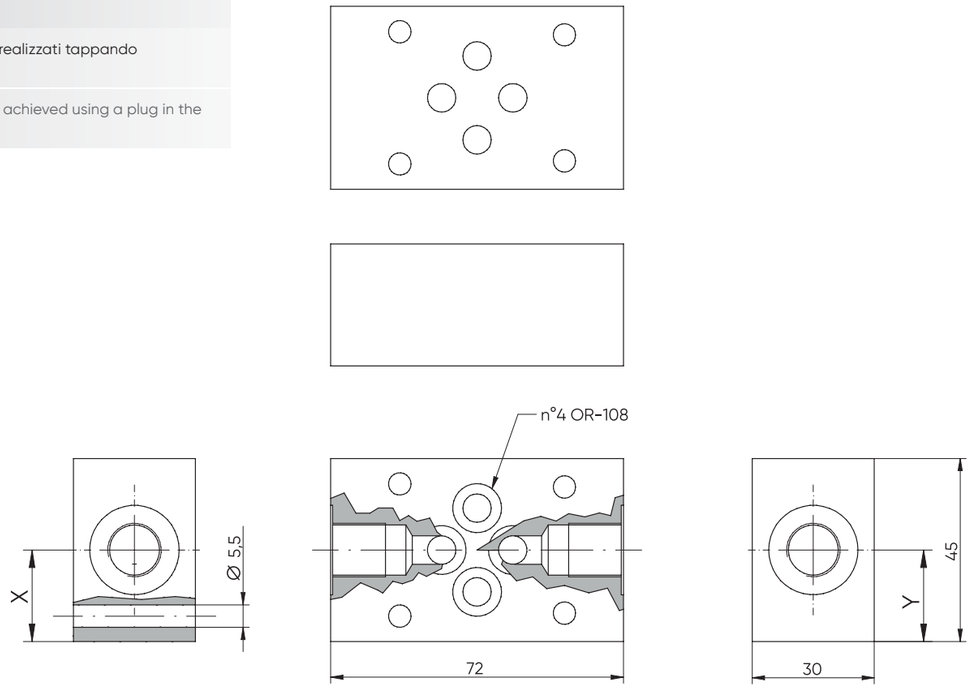

E_ 06 – 01 - __ – _

S = STEEL

SEE TABLE

14 = BSP 1/4G
38 = BSP 3/8G

12.2 Pannello modulare Cetop 3 per pressostato / Cetop 3 modular plate for pressure switch

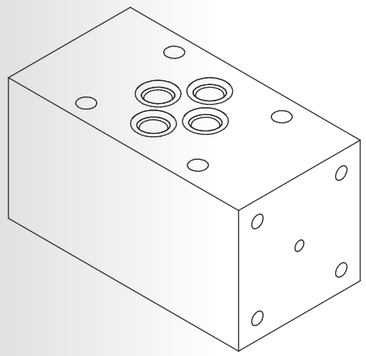

Cod.	Diagrams	
0	Blind	Standard
1	A+B	Standard
2	A	Standard
3	B	Standard
5	P	Standard

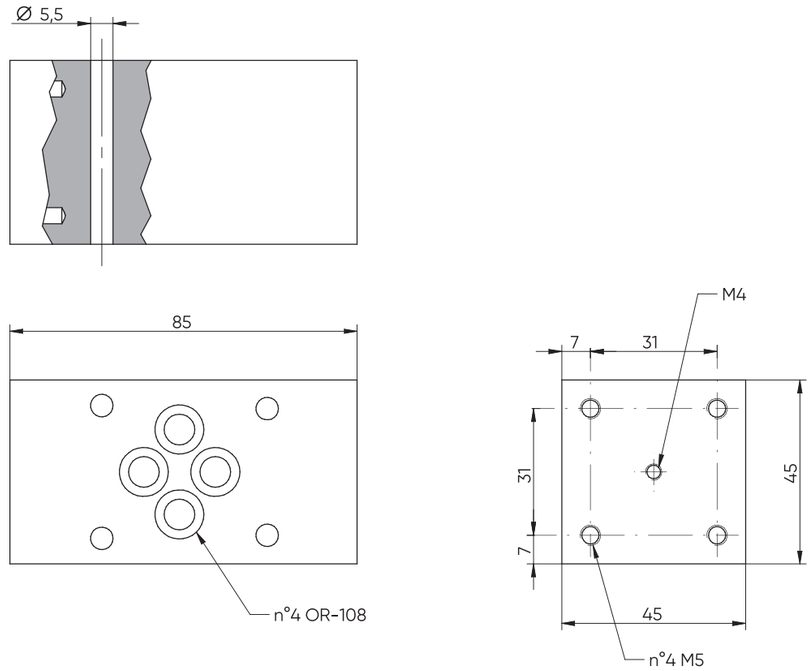

E_ 610 – 06 – _

S = STEEL
A = ALUMINIUM

SEE TABLE