Oleodinamica 2MP DRV-S10-02-110-N-H direct-acting cartridge relief valve

Manufacturer: Oleodinamica 2MP

Manufacturer part number / published order designation: DRV-S10-02-110-N-H

Published model: DRV-S10-02-110-N-H

About this compilation

Prepared by Hydmaster from selected manufacturer documentation. Original technical pages follow without cropped drawings, rewritten data or altered units. This cover and index are Hydmaster editorial material, not a manufacturer-issued exact-execution datasheet.

Coverage: selected pages relevant to the identified size and configuration. Other options or neighbouring models retained on an original page apply only where explicitly identified.

Execution notes and conditions

DRV-S10-02-110-N-H is an actual supplier-selected SKU matched to the OEM ordering matrix. OEM spring option 110 states 5-110 bar; supplier model table states 5-110 bar; selected variant states 10-90 BAR. The exact supplied spring range and preset remain unverified and no range facet is assigned. Preserve the complete original 19.3 spread; the photograph is representative.

Source-page index

Source page numbers below are physical pages of each complete original PDF. The original printed page labels and technical content remain unchanged. Compiled page numbers count this cover/index.

Source A: Current manufacturer exactDRV-S10-02family/table/option matrix; supplier selected range contradiction disclosed, not silently resolved.

Original pages	Compiled pages	Relevant content
78	2	Current manufacturer exactDRV-S10-02family/table/option matrix; supplier selected range contradiction disclosed, not silently resolved.

19.3 DRV Valvola regolatrice di pressione diretta SAE 10 / SAE 10 direct acting relief valve

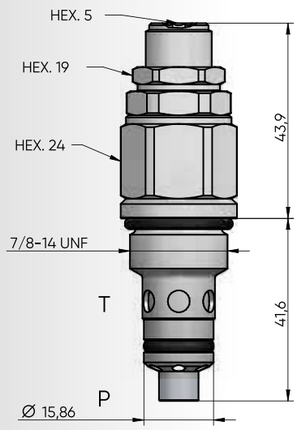

La valvola apre il passaggio dell'olio da 1 a 2 solo quando la pressione dell'olio applicata su 1 supera la forza della molla.
DRV opens flow passage from port 1 to 2 only when the oil pressure at 1 exceeds the spring setting.

Prestazioni / Performance

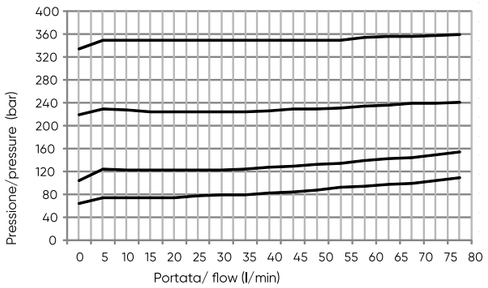

Schema idraulico / Hydraulic scheme

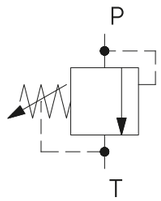

Caratteristiche tecniche / Technical features	
Pressione massima / Maximum pressure	350 bar (5075 psi)
Portata nominale / Nominal Flow	80 l/min (21,1 gpm)
Temperatura di esercizio / Operating temperature	-30 / +110 °C
Cavità / Cavity	C035
Trafilamento interno / Internal leakage	0,25cc /min
Coppia / Torque	55-65 Nm
Peso / Weight	0,17 kg

Tipi di regolazione / Regulation type

H	Vite con chiave esagonale (STD) Hexagonal head screw (STD)
C	Cappuccio inviolabile Cover cap not adjustable

Codice d'ordinazione / Ordering code

DRV-S10-02-____-__-__-_ _____

MOLLA / SPRING
110 = 5-110 bar
180 = 10-180 bar
240 = 10-240 bar
350 = 85-350 bar

GUARNIZIONI / SEALS
N = NBR

TIPI DI REGOLAZIONE / TYPE OF REGULATION

DIMENSIONE CORPO / SIZE BODY /
OMETTERE/OMIT
200 =BSP3/8" (pag.18.2)
300 =BSP1/2" (pag.18.2)
303 =BSP1/2" (pag.18.7)
403 =BSP3/4" (pag.18.7)

MATERIALE CORPO / MATERIAL BODY
OMETTERE/OMIT
S = STEEL
A = ALLUMINIUM

19.4 DRV Valvola regolatrice di pressione diretta M20 / M20 direct acting relief valve

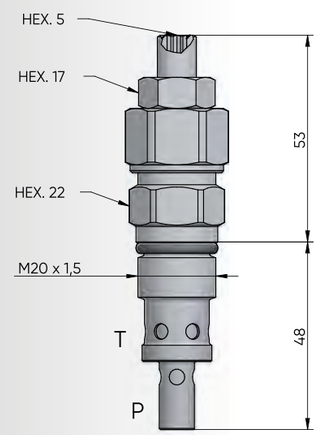

La valvola apre il passaggio dell'olio da 1 a 2 solo quando la pressione dell'olio applicata su 1 supera la forza della molla.
DRV opens flow passage from port 1 to 2 only when the oil pressure at 1 exceeds the spring setting.

Prestazioni / Performance

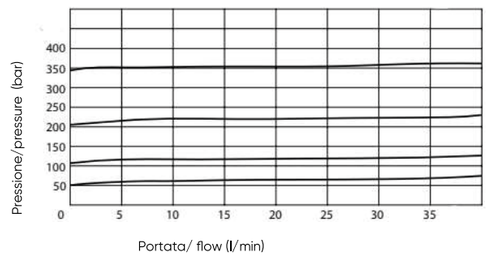

Schema idraulico / Hydraulic scheme

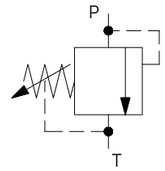

Caratteristiche tecniche / Technical features	
Pressione massima / Maximum pressure	420 bar (6091 psi)
Portata nominale / Nominal Flow	40 l/min (10,6 gpm)
Temperatura di esercizio / Operating temperature	-20 / +80 °C
Cavità / Cavity	C008
Trafilamento interno / Internal leakage	1 cc/min
Coppia / Torque	35-40 Nm
Peso / Weight	0,15 kg

Tipi di regolazione / Regulation type

H	Vite con chiave esagonale (STD) Hexagonal head screw (STD)
K	Pomolo Knob
C	Cappuccio inviolabile Cover cap not adjustable

Codice d'ordinazione / Ordering code

DRV-M20-02-____-__-__-_ _____

MOLLA / SPRING
055 = 5-55 bar
110 = 25-110 bar
215 = 50-215 bar
350 = 100-350 bar
420 = 100-420 bar

GUARNIZIONI / SEALS
N = NBR

TIPI DI REGOLAZIONE / REGULATION TYPE

DIMENSIONE CORPO / SIZE BODY
OMETTERE/OMIT
200= BSP3/8"(pag.18.6)
300= BSP1/2"(pag.18.6)
201= BSP3/8"(pag.18.7)
301= BSP1/2"(pag.18.7)

MATERIALE CORPO / MATERIAL BODY
OMETTERE/OMIT
S = STEEL
A = ALLUMINIUM