Oleodinamica 2MP DRV-S08-04-350-N-H direct-acting cartridge relief valve

Manufacturer: Oleodinamica 2MP

Manufacturer part number / published order designation: DRV-S08-04-350-N-H

Published model: DRV-S08-04-350-N-H

About this compilation

Prepared by Hydmaster from selected manufacturer documentation. Original technical pages follow without cropped drawings, rewritten data or altered units. This cover and index are Hydmaster editorial material, not a manufacturer-issued exact-execution datasheet.

Coverage: selected pages relevant to the identified size and configuration. Other options or neighbouring models retained on an original page apply only where explicitly identified.

Execution notes and conditions

DRV-S08-04-350-N-H is an actual independently offered selected SKU verified against explicit factory series/options; full concatenated code is not literally printed. The manufacturer and selected supplier agree on the 350 bar maximum pressure and 30 l/min flow reference. Their mass references differ (0.145 kg in the original and 0.1 kg in supplier variation metadata), so mass is omitted. The spring adjustment range is not evidence of a delivered pressure calibration. The spring range is not a supplied preset. Preserve full source pages; no disputed numeric pressure/flow/torque/temp/mass/dimension facets.

Source-page index

Source page numbers below are physical pages of each complete original PDF. The original printed page labels and technical content remain unchanged. Compiled page numbers count this cover/index.

Source A: Full current manufacturer spread containing exact series technical table, visible selected spring/seal/adjustment cells, diagram and drawing. Full SKU exists as selected supplier item, not printed concatenated factory row.

Original pages	Compiled pages	Relevant content
77	2	Full current manufacturer spread containing exact series technical table, visible selected spring/seal/adjustment cells, diagram and drawing. Full SKU exists as selected supplier item, not printed concatenated factory row.

19.1 DRV Valvola regolatrice di pressione diretta SAE 08 / SAE 08 direct acting relief valve

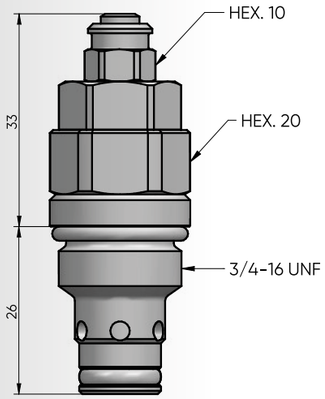

La valvola apre il passaggio dell'olio da 1 a 2 solo quando la pressione dell'olio applicata su 1 supera la forza della molla.
DRV opens flow passage from port 1 to 2 only when the oil pressure at 1 exceeds the spring setting.

Prestazioni / Performance

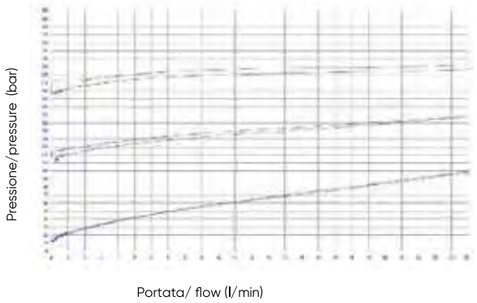

Schema idraulico / Hydraulic scheme

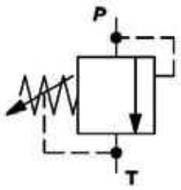

Caratteristiche tecniche / Technical features	
Pressione massima / Maximum pressure	420 bar (6091 psi)
Portata nominale / Nominal Flow	25 l/min (6,6 gpm)
Temperatura di esercizio / Operating temperature	-30 / +110 °C
Cavità / Cavity	C007
Max.trafilamento interno / Max. internal leakage	5 cc/min -80%
Coppia / Torque	40-45 Nm
Peso / Weight	0,09 kg

Tipi di regolazione / Regulation type

H	Vite con chiave esagonale (STD) Hexagonal head screw (STD)

Codice d'ordinazione / Ordering code

D R V - S 0 8 - 0 3 - ____ - _ - _ - _ ____

MOLLA / SPRING
160 = 10-160 bar
220 = 40-220 bar
290 = 100-290 bar
350 = 130-350 bar

GUARNIZIONI / SEALS
N = NBR

TIPI DI REGOLAZIONE / TYPE OF REGULATION

DIMENSIONE CORPO/ SIZE BODY
OMETTERE/OMIT
100 =BSP1/4" (pag.18.7)
200 =BSP3/8" (pag.18.7)
101 =BSP1/4" (pag.18.1)
201 =BSP3/8" (pag.18.1)
102=BSP1/4" (pag.18.2)
202= BSP3/8" (pag.18.2)

MATERIALE CORPO/ MATERIAL BODY
OMETTERE/OMIT
S = STEEL
A = ALLUMINIUM

19.2 DRV Valvola regolatrice di pressione diretta SAE 08 / SAE 08 direct acting relief valve

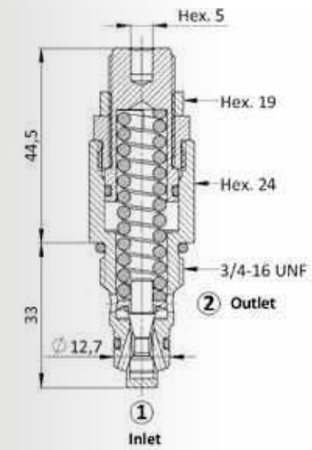

La valvola apre il passaggio dell'olio da 1 a 2 solo quando la pressione dell'olio applicata su 1 supera la forza della molla.
DRV opens flow passage from port 1 to 2 only when the oil pressure at 1 exceeds the spring setting.

Prestazioni / Performance

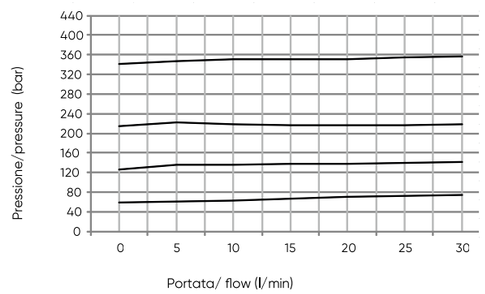

Schema idraulico / Hydraulic scheme

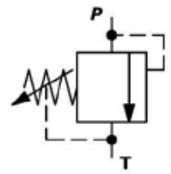

Caratteristiche tecniche / Technical features	
Pressione massima / Maximum pressure	350 bar (5075 psi)
Portata nominale / Nominal Flow	30 l/min (7,9 gpm)
Temperatura di esercizio / Operating temperature	-30 / +110 °C
Cavità / Cavity	C007
Max.trafilamento interno / Max. internal leakage	0,25cc/min -80%
Coppia / Torque	40-45 Nm
Peso / Weight	0,145 kg

Tipi di regolazione / Regulation type

H	Vite con chiave esagonale (STD) Hexagonal head screw (STD)
C	Cappuccio inviolabile Cover cap not adjustable

Codice d'ordinazione / Ordering code

D R V - S 0 8 - 0 4 - ____ - _ - _ - _ ____

MOLLA / SPRING
060 = 15-60 bar
135 = 25-135 bar
220 = 50-220 bar
350 = 120-350 bar

GUARNIZIONI / SEALS
N = NBR

TIPI DI REGOLAZIONE / TYPE OF REGULATION

DIMENSIONE CORPO/ SIZE BODY
OMETTERE/OMIT
100 =BSP1/4" (pag.18.7)
200 =BSP3/8" (pag.18.7)
101 =BSP1/4" (pag.18.1)
201 =BSP3/8" (pag.18.1)
102=BSP1/4" (pag.18.2)
202= BSP3/8" (pag.18.2)

MATERIALE CORPO/ SIZE BODY
OMETTERE/OMIT
S = STEEL
A = ALLUMINIUM