Oleodinamica 2MP DRV-M26-01-055-N-H direct-acting cartridge relief valve

Manufacturer: Oleodinamica 2MP

Manufacturer part number / published order designation: DRV-M26-01-055-N-H

Published model: DRV-M26-01-055-N-H

About this compilation

Prepared by Hydmaster from selected manufacturer documentation. Original technical pages follow without cropped drawings, rewritten data or altered units. This cover and index are Hydmaster editorial material, not a manufacturer-issued exact-execution datasheet.

Coverage: selected pages relevant to the identified size and configuration. Other options or neighbouring models retained on an original page apply only where explicitly identified.

Execution notes and conditions

DRV-M26-01-055-N-H is an actual independently offered selected SKU verified against explicit factory series/options; full concatenated code is not literally printed. The manufacturer lists a 250 bar maximum pressure for this M26 family; the supplier page instead states 350 bar. This discrepancy is retained explicitly and no verified numeric maximum-pressure facet is assigned. The spring adjustment range is not a delivered preset or a separate body pressure rating. The spring range is not a supplied preset. Preserve full source pages; no disputed numeric pressure/flow/torque/temp/mass/dimension facets.

Source-page index

Source page numbers below are physical pages of each complete original PDF. The original printed page labels and technical content remain unchanged. Compiled page numbers count this cover/index.

Source A: Full current manufacturer spread containing exact series technical table, visible selected spring/seal/adjustment cells, diagram and drawing. Full SKU exists as selected supplier item, not printed concatenated factory row.

Original pages	Compiled pages	Relevant content
79	2	Full current manufacturer spread containing exact series technical table, visible selected spring/seal/adjustment cells, diagram and drawing. Full SKU exists as selected supplier item, not printed concatenated factory row.

19.5 DRV Valvola regolatrice di pressione diretta M26 / M26 direct acting relief valve

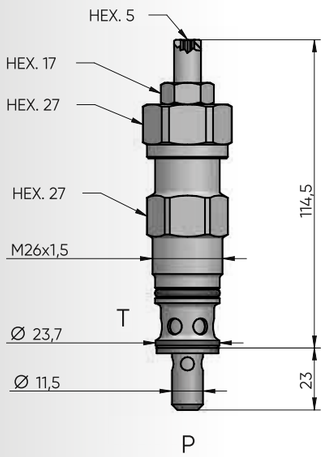

La valvola apre il passaggio dell'olio da 1 a 2 solo quando la pressione dell'olio applicata su 1 supera la forza della molla.
DRV opens flow passage from port 1 to 2 only when the oil pressure at 1 exceeds the spring setting.

Prestazioni / Performance

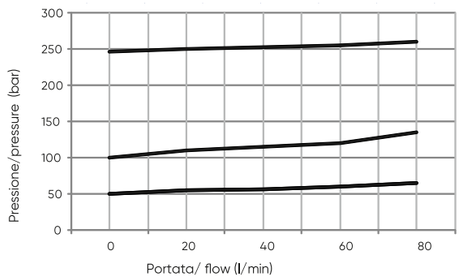

Schema idraulico / Hydraulic scheme

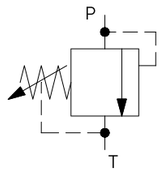

Caratteristiche tecniche / Technical features

Pressione massima / Maximum pressure	250 bar (3625 psi)
Portata nominale / Nominal Flow	80 l/min (21,1 gpm)
Temperatura di esercizio / Operating temperature	-30 / +110 °C
Cavità / Cavity	C025
Trafilamento interno / Internal leakage	1 cc/min to 80% of nominal set point
Coppia / Torque	75-80 Nm
Peso / Weight	0,35 kg

Tipi di regolazione / Regulation type

H	Vite con chiave esagonale (STD) Hexagonal head screw (STD)
K	Pomolo Knob
C	Cappuccio inviolabile Cover cap not adjustable

Codice d'ordinazione / Ordering code

DRV-M26-01- ____ - _ - _ - _ - _ _____

MOLLA / SPRING
055 = 5-55 bar
110 = 25-110 bar
250 = 75-250 bar

GUARNIZIONI / SEALS
N = NBR

TIPI DI REGOLAZIONE / TYPE OF REGULATION

DIMENSIONE CORPO / SIZE BODY
OMETTERE/OMIT
300= BSP1/2"(pag.18.6)
400= BSP3/4"(pag.18.6)
501= BSP1"(pag.18.7)
601= BSP1.1/4"(pag.18.7)

MATERIALE CORPO / MATERIAL BODY
OMETTERE/OMIT
S = STEEL
A = ALLUMINIUM

19.6 RPD Valvola riduttrice di pressione diretta SAE 10 / SAE 10 direct acting pressure reducing valve

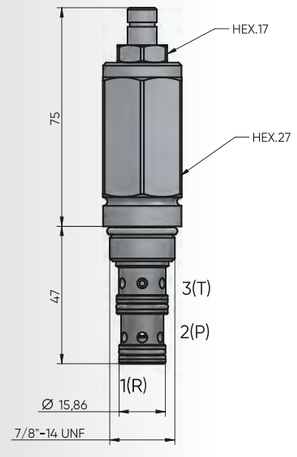

La valvola riduttrice di pressione serve a mantenere costante la pressione a valle, indipendentemente dalla pressione a monte anche con circolazione interrotta. La valvola riduce la pressione da 2 a 1.
The pressure reducing valve serves to preserv constant the pressure downstream, regardless of the upstream pressure even with circulation stopped. The valve reduces pressure from 2 to 1.

Prestazioni / Performance

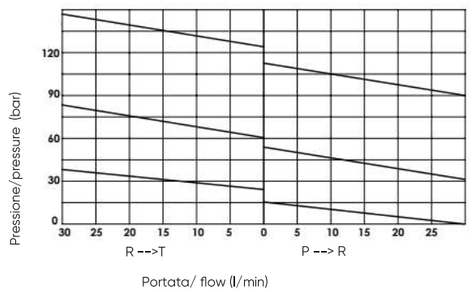

Schema idraulico / Hydraulic scheme

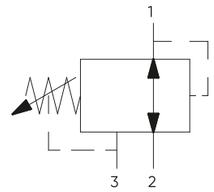

Caratteristiche tecniche / Technical features

Pressione massima / Maximum pressure	350 bar (5075 psi)
Portata nominale / Nominal Flow	30 l/min (7,9 gpm)
Temperatura di esercizio / Operating temperature	-20 / +80 °C
Cavità / Cavity	C021
Trafilamento interno / Internal leakage	70 cc/min (350 bar on port 2)
Coppia / Torque	50-55 Nm
Peso / Weight	0,31 kg

Tipi di regolazione / Regulation type

H	Vite con chiave esagonale (STD) Hexagonal head screw (STD)
K	Pomolo Knob

Codice d'ordinazione / Ordering code

RPD-S10-02- ____ - _ - _ - _ - _ _____

MOLLA / SPRING
035 = 5-35 bar
060 = 10-60 bar
180= 35-180 bar

GUARNIZIONI / SEALS
N = NBR

TIPI DI REGOLAZIONE / TYPE OF REGULATION

DIMENSIONE CORPO / SIZE BODY
OMETTERE/OMIT
200=BSP3/8"(pag.18.3)
300=BSP1/2"(pag.18.3)
201 =BSP3/8"(pag.18.4)
301 =BSP1/2"(pag.18.4)

MATERIALE CORPO / MATERIAL BODY
OMETTERE/OMIT
S = STEEL
A = ALLUMINIUM