Oleodinamica 2MP DRV-M20-02-215-N-H direct-acting cartridge relief valve

Manufacturer: Oleodinamica 2MP

Manufacturer part number / published order designation: DRV-M20-02-215-N-H

Published model: DRV-M20-02-215-N-H

About this compilation

Prepared by Hydmaster from selected manufacturer documentation. Original technical pages follow without cropped drawings, rewritten data or altered units. This cover and index are Hydmaster editorial material, not a manufacturer-issued exact-execution datasheet.

Coverage: selected pages relevant to the identified size and configuration. Other options or neighbouring models retained on an original page apply only where explicitly identified.

Execution notes and conditions

DRV-M20-02-215-N-H is an actual independently offered selected SKU verified against explicit factory series/options; full concatenated code is not literally printed. The current manufacturer catalogue lists 420 bar and 40 l/min, while the earlier manufacturer sheet lists 420 bar and 30 l/min and the supplier states 350 bar and 30 l/min. Torque and temperature also differ between original editions. These unresolved ratings, mass and revision-dependent dimensions are not assigned as verified numeric specifications. The spring range is not a supplied preset. Preserve full source pages; no disputed numeric pressure/flow/torque/temp/mass/dimension facets.

Source-page index

Source page numbers below are physical pages of each complete original PDF. The original printed page labels and technical content remain unchanged. Compiled page numbers count this cover/index.

Source A: Full current manufacturer spread containing exact series technical table, visible selected spring/seal/adjustment cells, diagram and drawing. Full SKU exists as selected supplier item, not printed concatenated factory row.

Original pages	Compiled pages	Relevant content
78	2	Full current manufacturer spread containing exact series technical table, visible selected spring/seal/adjustment cells, diagram and drawing. Full SKU exists as selected supplier item, not printed concatenated factory row.

Source B: Genuine earlier Oleodinamica2MP original visibly branded; retained to show pressure/flow/torque/temperature revision conflict, not to select convenient ratings.

Supplemental stage/component reference; not a complete assembly drawing.

Original pages	Compiled pages	Relevant content
1	3	Genuine earlier Oleodinamica2MP original visibly branded; retained to show pressure/flow/torque/temperature revision conflict, not to select convenient ratings.

19.3 DRV Valvola regolatrice di pressione diretta SAE 10 / SAE 10 direct acting relief valve

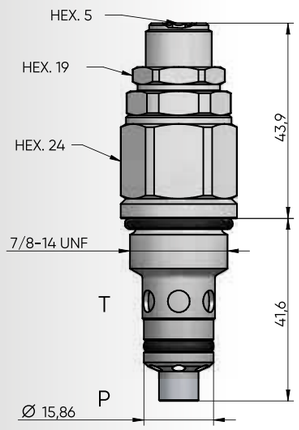

La valvola apre il passaggio dell'olio da 1 a 2 solo quando la pressione dell'olio applicata su 1 supera la forza della molla.
DRV opens flow passage from port 1 to 2 only when the oil pressure at 1 exceeds the spring setting.

Prestazioni / Performance

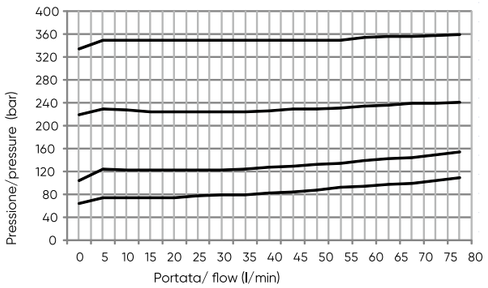

Schema idraulico / Hydraulic scheme

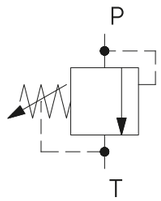

Caratteristiche tecniche / Technical features	
Pressione massima / Maximum pressure	350 bar (5075 psi)
Portata nominale / Nominal Flow	80 l/min (21,1 gpm)
Temperatura di esercizio / Operating temperature	-30 / +110 °C
Cavità / Cavity	C035
Trafilamento interno / Internal leakage	0,25cc /min
Coppia / Torque	55-65 Nm
Peso / Weight	0,17 kg

Tipi di regolazione / Regulation type

H	Vite con chiave esagonale (STD) Hexagonal head screw (STD)
C	Cappuccio inviolabile Cover cap not adjustable

Codice d'ordinazione / Ordering code

DRV-S10-02-____-__-__-_ _____

MOLLA / SPRING
110 = 5-110 bar
180 = 10-180 bar
240 = 10-240 bar
350 = 85-350 bar

GUARNIZIONI / SEALS
N = NBR

TIPI DI REGOLAZIONE / TYPE OF REGULATION

DIMENSIONE CORPO / SIZE BODY /
OMETTERE/OMIT
200 =BSP3/8" (pag.18.2)
300 =BSP1/2" (pag.18.2)
303 =BSP1/2" (pag.18.7)
403 =BSP3/4" (pag.18.7)

MATERIALE CORPO / MATERIAL BODY
OMETTERE/OMIT
S = STEEL
A = ALLUMINIUM

19.4 DRV Valvola regolatrice di pressione diretta M20 / M20 direct acting relief valve

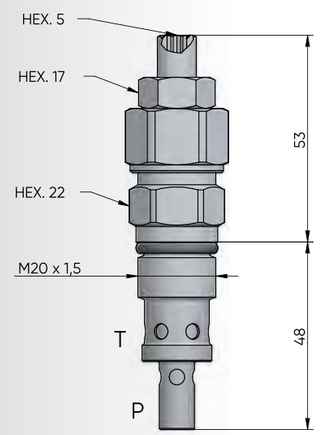

La valvola apre il passaggio dell'olio da 1 a 2 solo quando la pressione dell'olio applicata su 1 supera la forza della molla.
DRV opens flow passage from port 1 to 2 only when the oil pressure at 1 exceeds the spring setting.

Prestazioni / Performance

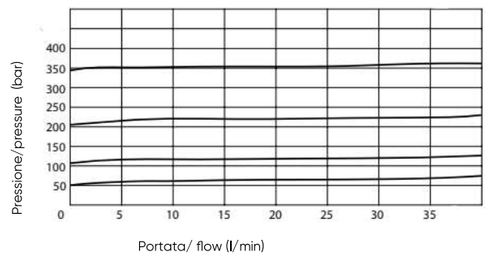

Schema idraulico / Hydraulic scheme

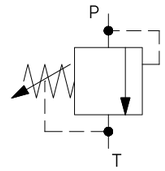

Caratteristiche tecniche / Technical features	
Pressione massima / Maximum pressure	420 bar (6091 psi)
Portata nominale / Nominal Flow	40 l/min (10,6 gpm)
Temperatura di esercizio / Operating temperature	-20 / +80 °C
Cavità / Cavity	C008
Trafilamento interno / Internal leakage	1 cc/min
Coppia / Torque	35-40 Nm
Peso / Weight	0,15 kg

Tipi di regolazione / Regulation type

H	Vite con chiave esagonale (STD) Hexagonal head screw (STD)
K	Pomolo Knob
C	Cappuccio inviolabile Cover cap not adjustable

Codice d'ordinazione / Ordering code

DRV-M20-02-____-__-__-_ _____

MOLLA / SPRING
055 = 5-55 bar
110 = 25-110 bar
215 = 50-215 bar
350 = 100-350 bar
420 = 100-420 bar

GUARNIZIONI / SEALS
N = NBR

TIPI DI REGOLAZIONE / REGULATION TYPE

DIMENSIONE CORPO / SIZE BODY
OMETTERE/OMIT
200= BSP3/8"(pag.18.6)
300= BSP1/2"(pag.18.6)
201= BSP3/8"(pag.18.7)
301= BSP1/2"(pag.18.7)

MATERIALE CORPO / MATERIAL BODY
OMETTERE/OMIT
S = STEEL
A = ALLUMINIUM

DRV

VALVOLA REGOLATRICE DI PRESSIONE DIRETTA M20
M20 DIRECT ACTING RELIEF VALVE

OLEODINAMICA 2MP

CARATTERISTICHE TECNICHE
TECHNICAL FEATURES

Pressione massima *Maximum pressure*	420 bar (6091 psi)
Portata nominale *Nominal Flow*	30 l/min (7,9 gpm)
Temperatura di esercizio *Operating temperature*	-30 / +110 °C
Cavità *Cavity*	C008
Trafilamento interno *Internal leakage*	1 cc/min 80% of nominal set point
Coppia Torque	45-50 Nm
Peso Weight	0,15 kg

SCHEMA IDRAULICO
HYDRAULIC SCHEME

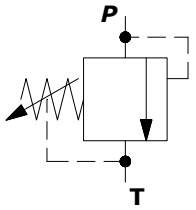

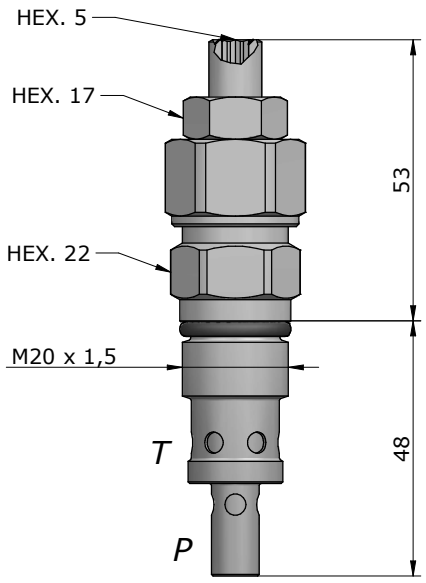

PRESTAZIONI
PERFORMANCS

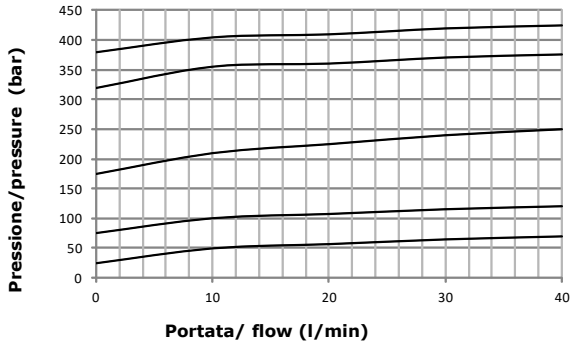

DESCRIZIONE
DESCRIPTION

La valvola apre il passaggio dell'olio da 1 a 2 solo quando la pressione dell'olio applicata su 1 supera la forza della molla.

DRV opens flow passage from port 1 to 2 only when the oil pressure at 1 exceeds the spring setting.

TIPI DI REGOLAZIONE
REGULATION TYPE

	H	**VITE CON CHIAVE ESAGONALE** (standard) *HEXAGONAL HEAD SCREW*
	K	**POMOLO** *KNOB*

CODICE D'ORDINAZIONE
ORDERING CODE

DRV-M20-02-____ - __ - __ - __ ____

MOLLA / SPRING
055 = 5-55 bar
110 = 25-110 bar
215 = 50-215 bar
350 = 100-350 bar
420 = 100-420 bar

GUARNIZIONI / SEALS
N = NBR (standard)
V = VITON

TIPI DI REGOLAZIONE / REGULATION TYPE

DIMENSIONE CORPO / SIZE BODY
OMETTERE/OMIT
200=BSP3/8"(pag.18.6)
300= BSP1/2"(pag.18.6)
201= BSP3/8"(pag.18.7)
301=BSP1/2"(pag.18.7)

MATERIALE CORPO / MATERIAL BODY
OMETTERE/OMIT
S = STEEL
A = ALLUMINIUM

Via Nicolò Copernico 12/c-d
29027 Casoni Di Gariga - Podenzano (PC) Italy

www.oleodinamica2mp.it
Tel +39 0523 523231
Fax +39 0523 524509