Naldoni e Biondi NBTT00800960 hydraulic cylinder plunger head

Manufacturer: Naldoni e Biondi

Part number: NBTT00800960

Specifications

Hydraulic cylinder plunger head.

Material: Steel.

Catalogue material designation: S355JR steel.

Bore diameter: 80 mm; outside diameter: 107 mm; mounting thread: M96 × 2.

Overall length: 95 mm.

Catalogue series pressure: 250 bar.

The complete cylinder design determines the operating pressure rating.

Seal and guide-bush compatibility depends on the cylinder design.

Manufacturer documentation

Technical reference	Pages in this PDF
Dimensional drawings and model data	2

Technical documentation: Naldoni e Biondi manufacturer catalogue.

Testata tuffante / Plunger head

> 250 bar

>Materiale di produzione:
Ghisa GG 25

> Production material :
Cast iron GG 25

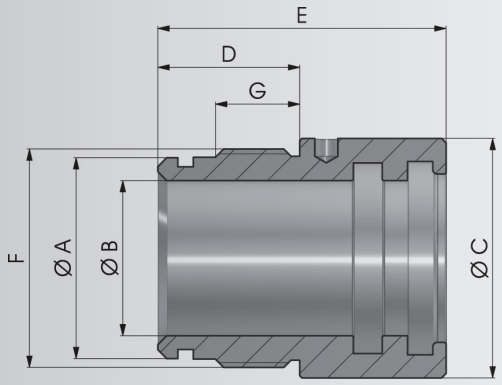

COD.	A	B	C	D	E	F	G
NBTT00200300	30	20	40	27	57	M34X1.5	15
NBTT00250350	35	25	45	32	65	M39X1.5	19
NBTT00300400	40	30	50	32	65	M44X1.5	19
NBTT00350450	45	35	55	32	65	M49X1.5	19
NBTT00400500	50	40	60	35	70	M54X1.5	22
NBTT00450550	55	45	65	35	70	M60X1.5	22
NBTT00500600	60	50	70	40	75	M64X1.5	27
NBTT00600700	70	60	80	40	75	M74X1.5	27

> 250 bar

> Materiale di produzione *:
Acciaio S355JR

> Production material *:
Steel S355JR

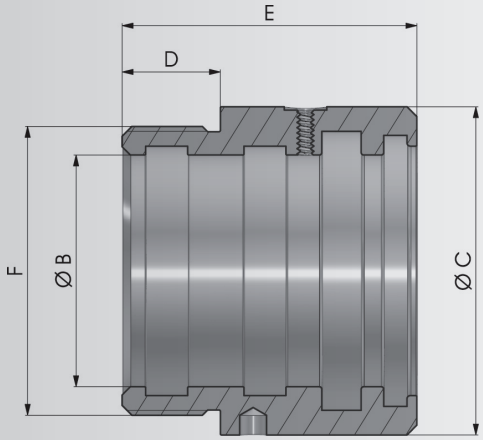

COD.	B	C	D	E	F
NBTT00700900*	70	100	30	90	M90X2
NBTT00800960*	80	107	40	95	M96X2
▸ NBTT01001240*	100	138,5	42	157	M124X2

▸ a richiesta su lotto minimo / on request on a minimum batch