Naldoni e Biondi NBTSFI4505 weld-on spherical rod end

Manufacturer: Naldoni e Biondi

Manufacturer part number / published order designation: NBTSFI4505

Published model: NBTSFI4505

About this compilation

Prepared by Hydmaster from selected manufacturer documentation. Original technical pages follow without cropped drawings, rewritten data or altered units. This cover and index are Hydmaster editorial material, not a manufacturer-issued exact-execution datasheet.

Coverage: selected pages relevant to the identified size and configuration. Other options or neighbouring models retained on an original page apply only where explicitly identified.

Execution notes and conditions

Exact article NBTSFI4505 is printed literally in the original manufacturer table; no code alias inferred.

Supplier selected manufacturer article and stock row match every factory dimension and mass. Supplier brand is blank (--); no independently authenticated supplied unit.

Manufacturer C40 production-material designation is not a separate insert-grade or material certificate. Exact row: on request subject to minimum batch. No pressure/load/lubrication/articulation specification assigned.

Representative family photograph, not exact variant certification.

Source-page index

Source page numbers below are physical pages of each complete original PDF. The original printed page labels and technical content remain unchanged. Compiled page numbers count this cover/index.

Source A: Manufacturer technical reference

Original pages	Compiled pages	Relevant content
130	2	Relevant unchanged original page

Terminale a snodo FI / Ball joint end FI

> **Materiale di produzione:** Acciaio C40
> **Production material:** Steel C40

> **Accoppiamento:** Acciaio su acciaio
> **Coupling:** Steel on steel

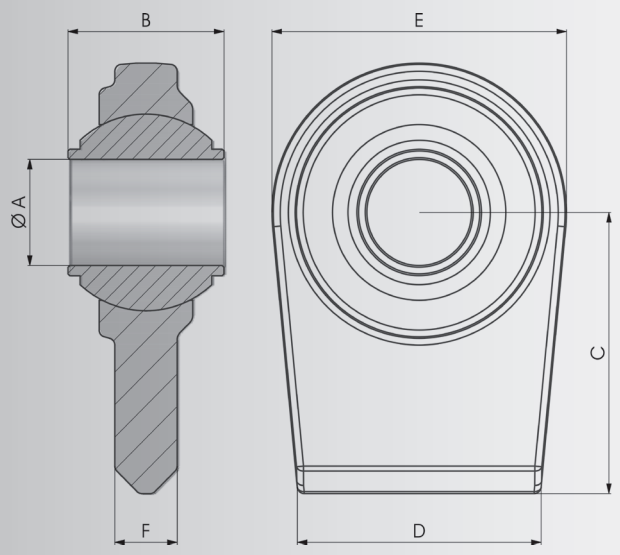

COD.	A	B	C	D	E	F	Kg
▸ NBTSFI4499	19	35	50	60	67	18	0,74
▸ NBTSFI4500	22.1	35	50	60	67	18	0,72
▸ NBTSFI4505	22.1	35	75	58	67	18	0,94
▸ NBTSFI4578	28.4	35	80	70	85	18	1,40
▸ NBTSFI4576	28.4	45	80	70	85	18	1,44

▸ a richiesta su lotto minimo / on request on a minimum batch