Naldoni e Biondi NBTSBR4579 weld-on spherical rod end

Manufacturer: Naldoni e Biondi

Manufacturer part number / published order designation: NBTSBR4579

Published model: NBTSBR4579

About this compilation

Prepared by Hydmaster from selected manufacturer documentation. Original technical pages follow without cropped drawings, rewritten data or altered units. This cover and index are Hydmaster editorial material, not a manufacturer-issued exact-execution datasheet.

Coverage: selected pages relevant to the identified size and configuration. Other options or neighbouring models retained on an original page apply only where explicitly identified.

Execution notes and conditions

Literal exact NBTSBR4579 factory row; no generated ordering combination or alias.

Applicable manufacturer pages [128, 129]; complete spherical insert/housing. No pressure, articulation angle or assembly-load certification inferred.

Clean representative supplier family photograph; not an exact finish or size certification.

Minimum-batch marker is present on this exact row; batch quantity unspecified.

Manufacturer catalogue specifies C40; selected supplier label C45 zinc-plated differs. Source-qualified reference only; actual supplied grade and finish not established. No grade/finish facet or equivalence claim.

Source-page index

Source page numbers below are physical pages of each complete original PDF. The original printed page labels and technical content remain unchanged. Compiled page numbers count this cover/index.

Source A: Naldoni e Biondi TS-BR ball-joint ends - exact article reference

Original pages	Compiled pages	Relevant content
128-129	2-3	Complete relevant original manufacturer drawing, production-material reference and exact dimensional row.

Terminale a snodo BR / Ball joint end BR

> **Materiale di produzione:** Acciaio C40
> **Production material:** Steel C40

> **Accoppiamento:** Acciaio su acciaio
> **Coupling:** Steel on steel

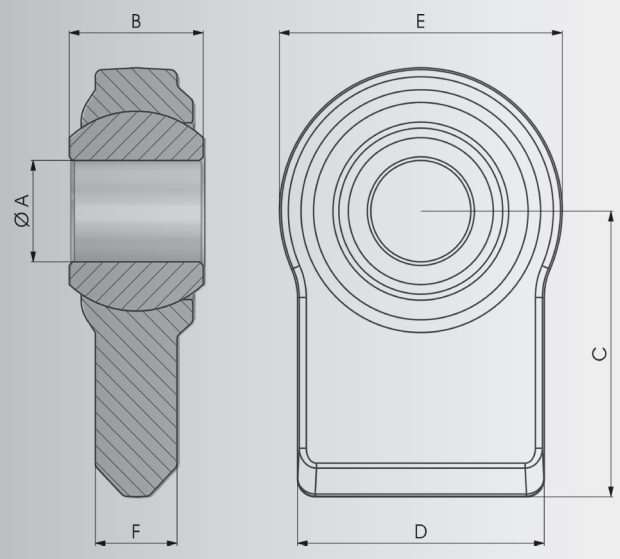

COD.	A	B	C	D	E	F	Kg
▸ NBTSBR4490	14	32	60	30	46	11	0,30
NBTSBR4495	16	20	60	30	46	11	0,27
▸ NBTSBR4494	18	35	43	50	65	15	0,58
▸ NBTSBR4497	19	35	43	50	65	15	0,56
▸ NBTSBR4496	19	44	50	50	50	17	0,46
NBTSBR4498	22.1	35	43	50	65	15	0,54
▸ NBTSBR4503	22.1	35	70	55	66	15	0,70
▸ NBTSBR4501	22.1	35	90	50	68	15	0,90
▸ NBTSBR4510	22.1	35	50	70	76	18	0,82
▸ NBTSBR4540	22.1	35	55	70	83	18	1,18
▸ NBTSBR4515	25.4	35	50	70	76	18	0,78
▸ NBTSBR4550	25.4	35	55	70	83	18	1,16
▸ NBTSBR4506	25.4	38	80	70	78	18	1,14
NBTSBR4566	25.4	38	80	70	80	23	1,56
▸ NBTSBR4569	25.4	45	65	70	80	22	1,36
▸ NBTSBR4520	26	35	50	70	76	18	0,79
▸ NBTSBR4530	28.4	35	50	70	76	18	0,76
▸ NBTSBR4560	28.4	35	55	70	83	18	1,12
▸ NBTSBR4507	28.4	38	80	70	78	18	1,10

▸ a richiesta su lotto minimo / on request on a minimum batch

Terminale a snodo BR / Ball joint end BR

COD.	A	B	C	D	E	F	Kg
▸ NBTSBR4568	28.4	38	80	70	80	23	1,52
▸ NBTSBR4570	28.4	45	65	70	80	22	1,32
▸ NBTSBR4562	28.4	45	55	70	83	18	1,16
▸ NBTSBR4579	28.4	45	82	76	90	17	1,48
▸ NBTSBR4580	28.4	45	65	70	96	22	1,70
▸ NBTSBR4615	28.4	45	65	80	108	24	2,16
▸ NBTSBR4575	28.4	45	80	70	80	23	1,54
▸ NBTSBR4597	32	45	65	70	96	22	1,66
▸ NBTSBR4600	34	45	65	70	96	22	1,62
▸ NBTSBR4612	34	45	65	80	108	24	2,04
▸ NBTSBR4602	35	45	65	70	96	22	1,60
▸ NBTSBR4616	35	45	65	80	108	24	2,00
▸ NBTSBR4604	37	45	65	70	96	22	1,56
▸ NBTSBR4614	37	45	65	80	108	24	1,98
▸ NBTSBR4610	38	45	65	80	108	24	1,96
▸ NBTSBR4617	42	45	65	80	108	24	1,88

▸ a richiesta su lotto minimo / on request on a minimum batch