# Naldoni e Biondi NBTSBR4560 weld-on spherical rod end

Manufacturer: Naldoni e Biondi

Manufacturer part number / published order designation: NBTSBR4560

Published model: NBTSBR4560

## About this compilation

Prepared by Hydmaster from selected manufacturer documentation. Original technical pages follow without cropped drawings, rewritten data or altered units. This cover and index are Hydmaster editorial material, not a manufacturer-issued exact-execution datasheet.

Coverage: selected pages relevant to the identified size and configuration. Other options or neighbouring models retained on an original page apply only where explicitly identified.

## Execution notes and conditions

Literal exact NBTSBR4560 current manufacturer row; family TS-BR; source physical pages 128.

A is bearing bore; source numeric A/B agree with the selected supplier own size fields. Supplier generic piston/cylinder labels are not imported as component meanings.

Current catalogue C40 steel and steel-on-steel contact; separate insert grade and material certificate not established.

Selected supplier states C45 zinc-plated steel, which conflicts with manufacturer C40. Generic Steel facet only; supplied grade and finish remain unestablished.

Exact row visually marked on request on a minimum batch; batch quantity unspecified.

Clean representative supplier family photograph; no exact-size or supplied-finish certification. No pressure/load/lubrication/articulation/welded-assembly capacity inferred.

## Source-page index

Source page numbers below are physical pages of each complete original PDF. The original printed page labels and technical content remain unchanged. Compiled page numbers count this cover/index.

## Source A: Original TS-BR drawing/material/contact page plus exact dimensional row; continuation page included only where needed.

| Original pages | Compiled pages | Relevant content |
|---|---|---|
| 128 | 2 | Original TS-BR drawing/material/contact page plus exact dimensional row; continuation page included only where needed. |

# Terminale a snodo BR / Ball joint end BR

> **Materiale di produzione:** Acciaio C40
> **Production material:** Steel C40

> **Accoppiamento:** Acciaio su acciaio
> **Coupling:** Steel on steel

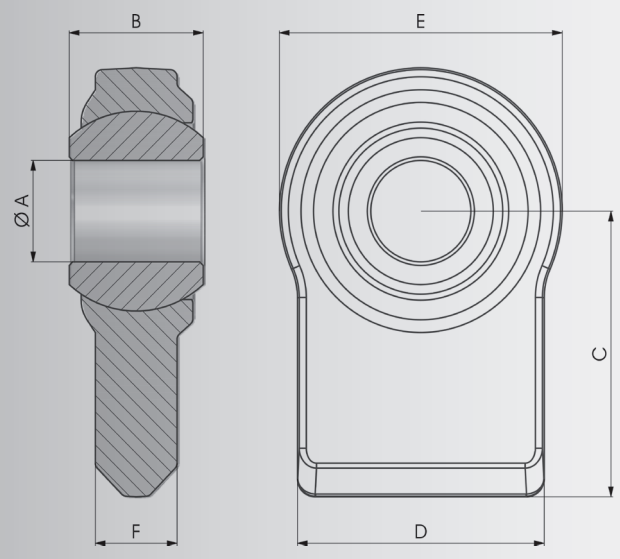


| COD. | A | B | C | D | E | F | Kg |
|---|---|---|---|---|---|---|---|
| ▸ NBTSBR4490 | 14 | 32 | 60 | 30 | 46 | 11 | 0,30 |
| NBTSBR4495 | 16 | 20 | 60 | 30 | 46 | 11 | 0,27 |
| ▸ NBTSBR4494 | 18 | 35 | 43 | 50 | 65 | 15 | 0,58 |
| ▸ NBTSBR4497 | 19 | 35 | 43 | 50 | 65 | 15 | 0,56 |
| ▸ NBTSBR4496 | 19 | 44 | 50 | 50 | 50 | 17 | 0,46 |
| NBTSBR4498 | 22.1 | 35 | 43 | 50 | 65 | 15 | 0,54 |
| ▸ NBTSBR4503 | 22.1 | 35 | 70 | 55 | 66 | 15 | 0,70 |
| ▸ NBTSBR4501 | 22.1 | 35 | 90 | 50 | 68 | 15 | 0,90 |
| ▸ NBTSBR4510 | 22.1 | 35 | 50 | 70 | 76 | 18 | 0,82 |
| ▸ NBTSBR4540 | 22.1 | 35 | 55 | 70 | 83 | 18 | 1,18 |
| ▸ NBTSBR4515 | 25.4 | 35 | 50 | 70 | 76 | 18 | 0,78 |
| ▸ NBTSBR4550 | 25.4 | 35 | 55 | 70 | 83 | 18 | 1,16 |
| ▸ NBTSBR4506 | 25.4 | 38 | 80 | 70 | 78 | 18 | 1,14 |
| NBTSBR4566 | 25.4 | 38 | 80 | 70 | 80 | 23 | 1,56 |
| ▸ NBTSBR4569 | 25.4 | 45 | 65 | 70 | 80 | 22 | 1,36 |
| ▸ NBTSBR4520 | 26 | 35 | 50 | 70 | 76 | 18 | 0,79 |
| ▸ NBTSBR4530 | 28.4 | 35 | 50 | 70 | 76 | 18 | 0,76 |
| ▸ NBTSBR4560 | 28.4 | 35 | 55 | 70 | 83 | 18 | 1,12 |
| ▸ NBTSBR4507 | 28.4 | 38 | 80 | 70 | 78 | 18 | 1,10 |

▸ a richiesta su lotto minimo / on request on a minimum batch