Naldoni e Biondi NBTP090075050 heavy-series hydraulic cylinder head

Manufacturer: Naldoni e Biondi

Part number: NBTP090075050

Specifications

Heavy-series hydraulic cylinder headbush.

Material designations: C45 and 080M46. Confirm the supplied material grade.

Bore: 50 mm; outside diameter: 89 mm; overall length: 70 mm; mounting thread: M80 × 2.

Pressure references differ: 250 bar and 350 bar. Confirm the applicable pressure rating for the cylinder design.

Select seals and guide bushes to suit the cylinder design.

Available on request, subject to a minimum order batch.

Manufacturer documentation

Technical reference	Pages in this PDF
Dimensional drawings and model data	2

Technical documentation: Naldoni e Biondi manufacturer catalogue.

Testata pesante / Heavy head

> 350 bar

> Materiale di produzione:
Acciaio C 45

> Production material :
Steel 080M46

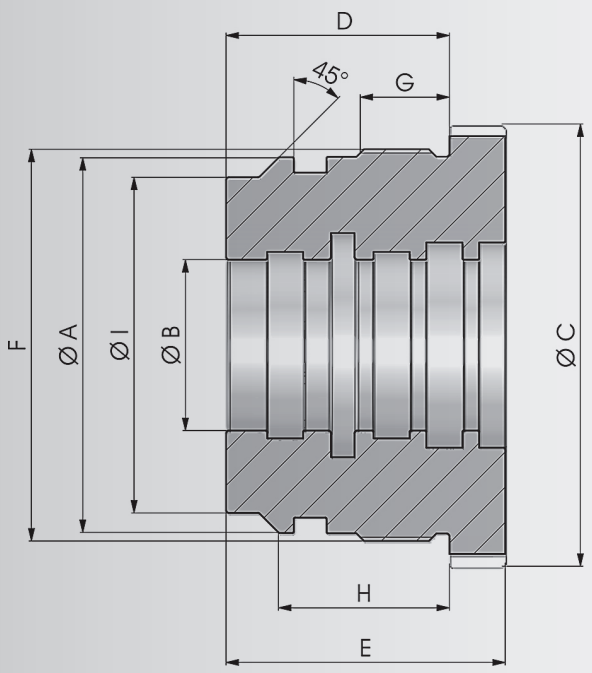

COD.	A	B	C	D	E	F	G	H	I
NBTP065050025	50	25	64	45	55	M54X1.5	22	38	45
NBTP065050030	50	30	64	45	55	M54X1.5	22	38	45
NBTP065050035	50	35	64	45	55	M54X1.5	22	38	45
NBTP075060030	60	30	74	48	60	M64X1.5	22	38	52
NBTP075060035	60	35	74	48	60	M64X1.5	22	38	52
NBTP075060040	60	40	74	48	60	M64X1.5	22	38	52
NBTP078063035	63	35	78	50	65	M68X1.5	22	40	53
NBTP078063040	63	40	78	50	65	M68X1.5	22	40	53
NBTP078063045	63	45	78	50	65	M68X1.5	22	40	53
NBTP085070040	70	40	84	50	65	M74X1.5	22	40	60
NBTP085070050	70	50	84	50	65	M74X1.5	22	40	60
▸ NBTP090075040	75	40	89	55	70	M80X2	25	43	65
▸ NBTP090075045	75	45	89	55	70	M80X2	25	43	65
▸ NBTP090075050	75	50	89	55	70	M80X2	25	43	65

▸ a richiesta su lotto minimo / on request on a minimum batch