Naldoni e Biondi NBTP065050025 heavy-series hydraulic cylinder head

Manufacturer: Naldoni e Biondi

Manufacturer part number / published order designation: NBTP065050025

Published model: NBTP065050025

About this compilation

Prepared by Hydmaster from selected manufacturer documentation. Original technical pages follow without cropped drawings, rewritten data or altered units. This cover and index are Hydmaster editorial material, not a manufacturer-issued exact-execution datasheet.

Coverage: selected pages relevant to the identified size and configuration. Other options or neighbouring models retained on an original page apply only where explicitly identified.

Execution notes and conditions

Exact literal NBTP065050025 manufacturer row on physical18/printed17; no generated code or alias.

Selected GAPI own product card names NALDONI and the exact Referencia; cached identity evidence, no stock or delivery claim.

Manufacturer production material: Steel. No independent material certificate inferred.

350 bar is the documented series-heading reference, not a maximum complete-cylinder assembly rating.

No minimum-batch triangle is present beside this exact selected row, checked by native glyph bbox and original pixels.

Original OEM sectional drawing only; no supplier photograph or exact supplied seal/bushing execution is represented.

Source-page index

Source page numbers below are physical pages of each complete original PDF. The original printed page labels and technical content remain unchanged. Compiled page numbers count this cover/index.

Source A: Naldoni e Biondi NBTP cylinder heads - exact article reference

Original pages	Compiled pages	Relevant content
18	2	Unchanged original manufacturer drawing, material/series-pressure headings and exact model row.

Testata pesante / Heavy head

> 350 bar

> Materiale di produzione:
Acciaio C 45

> Production material :
Steel 080M46

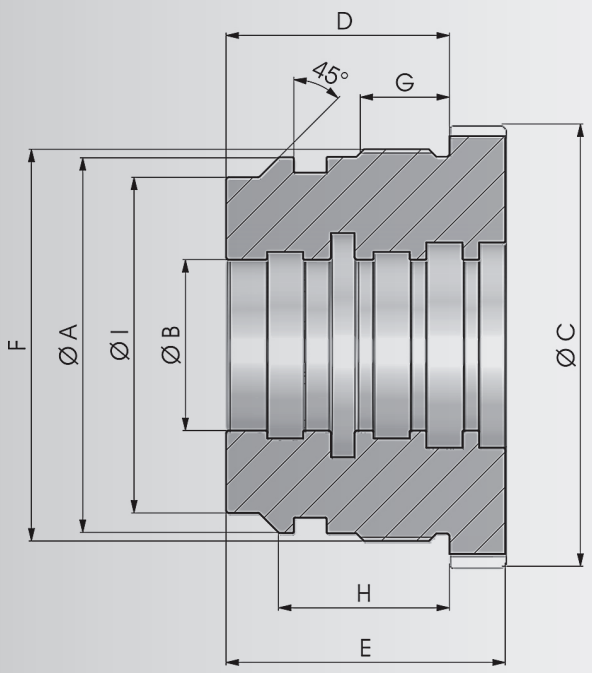

COD.	A	B	C	D	E	F	G	H	I
NBTP065050025	50	25	64	45	55	M54X1.5	22	38	45
NBTP065050030	50	30	64	45	55	M54X1.5	22	38	45
NBTP065050035	50	35	64	45	55	M54X1.5	22	38	45
NBTP075060030	60	30	74	48	60	M64X1.5	22	38	52
NBTP075060035	60	35	74	48	60	M64X1.5	22	38	52
NBTP075060040	60	40	74	48	60	M64X1.5	22	38	52
NBTP078063035	63	35	78	50	65	M68X1.5	22	40	53
NBTP078063040	63	40	78	50	65	M68X1.5	22	40	53
NBTP078063045	63	45	78	50	65	M68X1.5	22	40	53
NBTP085070040	70	40	84	50	65	M74X1.5	22	40	60
NBTP085070050	70	50	84	50	65	M74X1.5	22	40	60
▸ NBTP090075040	75	40	89	55	70	M80X2	25	43	65
▸ NBTP090075045	75	45	89	55	70	M80X2	25	43	65
▸ NBTP090075050	75	50	89	55	70	M80X2	25	43	65

▸ a richiesta su lotto minimo / on request on a minimum batch