Naldoni e Biondi NBTB011510060 short hydraulic cylinder head

Manufacturer: Naldoni e Biondi

Manufacturer part number / published order designation: NBTB011510060

Published model: NBTB011510060

About this compilation

Prepared by Hydmaster from selected manufacturer documentation. Original technical pages follow without cropped drawings, rewritten data or altered units. This cover and index are Hydmaster editorial material, not a manufacturer-issued exact-execution datasheet.

Coverage: selected pages relevant to the identified size and configuration. Other options or neighbouring models retained on an original page apply only where explicitly identified.

Execution notes and conditions

Exact literal NBTB011510060 manufacturer row on physical17/printed16; no generated code or alias.

Selected GAPI own product card names NALDONI and the exact Referencia; cached identity evidence, no stock or delivery claim.

Manufacturer production material: Cast iron GG 25. No independent material certificate inferred.

200 bar is the documented series-heading reference, not a maximum complete-cylinder assembly rating.

No minimum-batch triangle is present beside this exact selected row, checked by native glyph bbox and original pixels.

Original OEM sectional drawing only; no supplier photograph or exact supplied seal/bushing execution is represented.

Source-page index

Source page numbers below are physical pages of each complete original PDF. The original printed page labels and technical content remain unchanged. Compiled page numbers count this cover/index.

Source A: Naldoni e Biondi NBTB cylinder heads - exact article reference

Original pages	Compiled pages	Relevant content
17	2	Unchanged original manufacturer drawing, material/series-pressure headings and exact model row.

Testata bassa / Short head

> 200 bar

> Materiale di produzione:
Ghisa GG 25

> Production material :
Cast iron GG 25

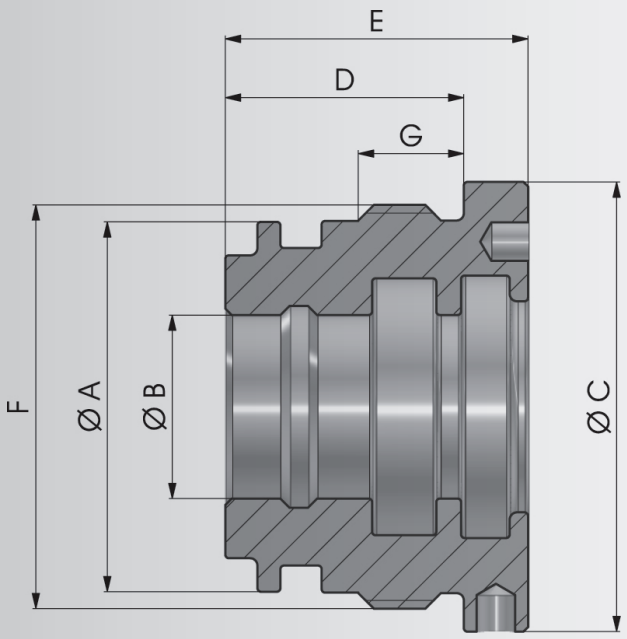

COD.	A	B	C	D	E	F	G
NBTB005004020	40	20	49	26	33	M44X1.5	11
NBTB005004025	40	25	49	26	33	M44X1.5	11
NBTB006005025	50	25	59	28	36	M54X1.5	13
NBTB006005030	50	30	59	28	36	M54X1.5	13
NBTB007006025	60	25	69	33	41	M64X1.5	16
NBTB007006030	60	30	69	33	41	M64X1.5	16
▸ NBTB007006032	60	32	69	33	41	M64X1.5	16
NBTB007006035	60	35	69	33	41	M64X1.5	16
NBTB008007035	70	35	79	33	41	M74X1.5	16
NBTB008007040	70	40	79	33	41	M74X1.5	16
NBTB009208040	80	40	92	36	46	M85X2	18
NBTB009208050	80	50	92	36	46	M85X2	18
NBTB011510050	100	50	114	45	55	M105X2	22
NBTB011510060	100	60	114	45	55	M105X2	22

▸ a richiesta su lotto minimo / on request on a minimum batch