Naldoni e Biondi NBT017015075 hydraulic cylinder head

Manufacturer: Naldoni e Biondi

Part number: NBT017015075

Specifications

Hydraulic cylinder head.

Production material designation: GG 25 cast iron.

Bore: 75 mm; outside diameter: 169 mm; catalogue dimension Ev: 102 mm; mounting thread: M155 × 2.

Catalogue series pressure: 250 bar.

The complete cylinder design determines the operating pressure rating.

Select seals and guide bushes to suit the cylinder design.

Available on request, subject to a minimum order batch.

Manufacturer documentation

Technical reference	Pages in this PDF
Dimensional drawings and model data	2-3

Technical documentation: Naldoni e Biondi manufacturer catalogue.

> 250 bar

> Materiale di produzione:
Ghisa GG 25

> Production material :
Cast iron GG 25

> Materiale di produzione *:
Alluminio

> Production material * :
Alluminium

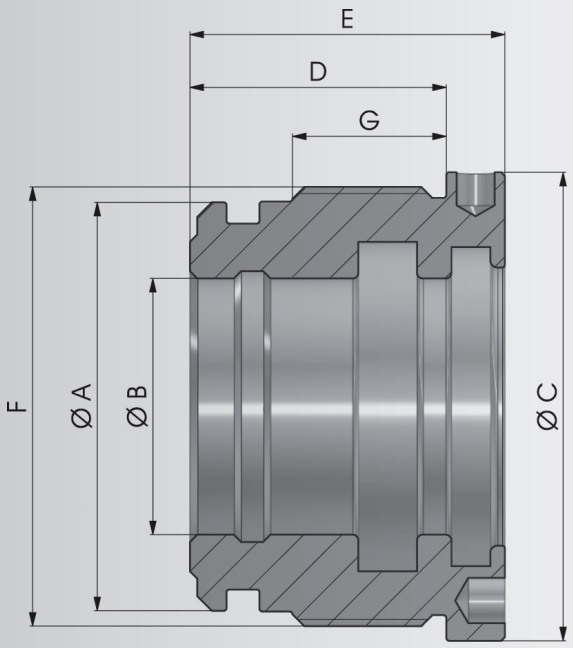

COD.	A	B	C	D	E	F	G
NBT003502516*	25	16	35	12	30	M28X1.5	12
NBT03502516G	25	16	35	24	30	M28X1.5	13
NBT004003016*	30	16	40	27	33	M34X1.5	15
NBT04003016G	30	16	40	27	33	M34X1.5	14
NBT04003020G	30	20	40	27	33	M34X1.5	14
NBT004203216	32	16	42	27	33	M36X1.5	15
NBT004203218	32	18	42	27	33	M36X1.5	15
NBT004203220	32	20	42	27	33	M36X1.5	15
NBT004503520	35	20	44	32	40	M39X1.5	19
NBT004503522	35	22	44	32	40	M39X1.5	19
NBT005004020	40	20	49	32	40	M44X1.5	19
NBT005004022	40	22	49	32	40	M44X1.5	19
NBT005004025	40	25	49	32	40	M44X1.5	19

Testata / Head

COD.	A	B	C	D	Ev	F	G
NBT016014070	140	70	159	80	92	M145X2	59
NBT016014080	140	80	159	80	92	M145X2	59
NBT016014090	140	90	159	80	92	M145X2	59
▸ NBT017015070	150	70	169	90	102	M155X2	69
▸ NBT017015075	150	75	169	90	102	M155X2	69
▸ NBT017015080	150	80	169	90	102	M155X2	69
▸ NBT018016070	160	70	179	90	102	M165X2	69
NBT018016080	160	80	179	90	102	M165X2	69
NBT018016090	160	90	179	90	102	M165X2	69
NBT180160100	160	100	179	90	102	M165X2	69
▸ NBT180160110	160	110	179	90	102	M165X2	69

▸ a richiesta su lotto minimo / on request on a minimum batch