Naldoni e Biondi NBT010008550 hydraulic cylinder head

Manufacturer: Naldoni e Biondi

Manufacturer part number / published order designation: NBT010008550

Published model: NBT010008550

About this compilation

Prepared by Hydmaster from selected manufacturer documentation. Original technical pages follow without cropped drawings, rewritten data or altered units. This cover and index are Hydmaster editorial material, not a manufacturer-issued exact-execution datasheet.

Coverage: selected pages relevant to the identified size and configuration. Other options or neighbouring models retained on an original page apply only where explicitly identified.

Execution notes and conditions

Exact literal NBT010008550 manufacturer row on physical12/printed11; no generated code or alias.

Selected GAPI own product card names NALDONI and the exact Referencia; cached identity evidence, no stock or delivery claim.

Manufacturer production material: Cast iron GG 25. No independent material certificate inferred.

250 bar is the documented series-heading reference, not a maximum complete-cylinder assembly rating.

No minimum-batch triangle is present beside this exact selected row, checked by native glyph bbox and original pixels.

Original OEM sectional drawing only; no supplier photograph or exact supplied seal/bushing execution is represented.

Source-page index

Source page numbers below are physical pages of each complete original PDF. The original printed page labels and technical content remain unchanged. Compiled page numbers count this cover/index.

Source A: Naldoni e Biondi NBT cylinder heads - exact article reference

Original pages	Compiled pages	Relevant content
9	2	Unchanged original manufacturer drawing, material/series-pressure headings and exact model row.
12	3	Unchanged original manufacturer drawing, material/series-pressure headings and exact model row.

> 250 bar

> Materiale di produzione:
Ghisa GG 25

> Production material :
Cast iron GG 25

> Materiale di produzione *:
Alluminio

> Production material * :
Alluminium

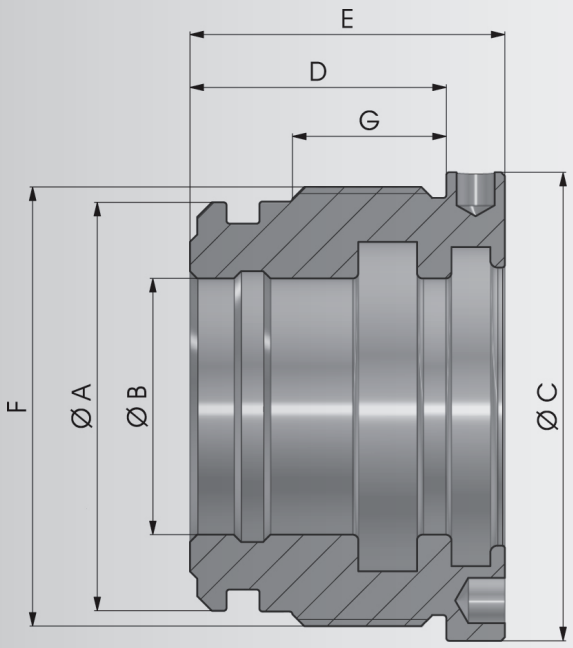

COD.	A	B	C	D	E	F	G
NBT003502516*	25	16	35	12	30	M28X1.5	12
NBT03502516G	25	16	35	24	30	M28X1.5	13
NBT004003016*	30	16	40	27	33	M34X1.5	15
NBT04003016G	30	16	40	27	33	M34X1.5	14
NBT04003020G	30	20	40	27	33	M34X1.5	14
NBT004203216	32	16	42	27	33	M36X1.5	15
NBT004203218	32	18	42	27	33	M36X1.5	15
NBT004203220	32	20	42	27	33	M36X1.5	15
NBT004503520	35	20	44	32	40	M39X1.5	19
NBT004503522	35	22	44	32	40	M39X1.5	19
NBT005004020	40	20	49	32	40	M44X1.5	19
NBT005004022	40	22	49	32	40	M44X1.5	19
NBT005004025	40	25	49	32	40	M44X1.5	19

COD.	A	B	C	D	E	F	G
NBT010008550	85	50	99	50	60	M90X2	33
NBT010509040	90	40	104	50	60	M95X2	33
NBT010509045	90	45	104	50	60	M95X2	33
NBT010509050	90	50	104	50	60	M95X2	33
NBT010509055	90	55	104	50	60	M95X2	33
▸ NBT010509056	90	56	104	50	60	M95X2	33
NBT010509060	90	60	104	50	60	M95X2	33
NBT011510040	100	40	114	70	82	M105X2	51
NBT011510045	100	45	114	70	82	M105X2	51
NBT011510050	100	50	114	70	82	M105X2	51
NBT011510055	100	55	114	70	82	M105X2	51
▸ NBT011510056	100	56	114	70	82	M105X2	51
NBT011510060	100	60	114	70	82	M105X2	51
NBT011510063	100	63	114	70	82	M105X2	51
NBT011510070	100	70	114	70	82	M105X2	51
NBT012511045	110	45	124	60	72	M115X2	41
NBT012511050	110	50	124	60	72	M115X2	41
NBT012511060	110	60	124	70	82	M115X2	51
NBT012511070	110	70	124	70	82	M115X2	51
NBT012511080	110	80	124	70	82	M115X2	51
NBT014012050	120	50	139	70	82	M125X2	49
NBT014012060	120	60	139	70	82	M125X2	49
NBT014012070	120	70	139	70	82	M125X2	49
NBT014012080	120	80	139	70	82	M125X2	49
NBT014012090	120	90	139	70	82	M125X2	49
▸ NBT014512555	125	55	144	80	92	M130X2	59
NBT014512560	125	60	144	80	92	M130X2	59
NBT014512563	125	63	144	80	92	M130X2	59
NBT014512570	125	70	144	80	92	M130X2	59
NBT014512580	125	80	144	80	92	M130X2	59
NBT014512590	125	90	144	80	92	M130X2	59
▸ NBT015013060	130	60	149	80	92	M135X2	59
▸ NBT015013070	130	70	149	80	92	M135X2	59
▸ NBT015013080	130	80	149	80	92	M135X2	59
▸ NBT015013090	130	90	149	80	92	M135X2	59

▸ a richiesta su lotto minimo / on request on a minimum batch