# Naldoni e Biondi NBT009508055 hydraulic cylinder head

Manufacturer: Naldoni e Biondi

Manufacturer part number / published order designation: NBT009508055

Published model: NBT009508055

## About this compilation

Prepared by Hydmaster from selected manufacturer documentation. Original technical pages follow without cropped drawings, rewritten data or altered units. This cover and index are Hydmaster editorial material, not a manufacturer-issued exact-execution datasheet.

Coverage: selected pages relevant to the identified size and configuration. Other options or neighbouring models retained on an original page apply only where explicitly identified.

## Execution notes and conditions

Exact literal NBT009508055 manufacturer row on physical11/printed10; no generated code or alias.

Selected GAPI own product card names NALDONI and the exact Referencia; cached identity evidence, no stock or delivery claim.

Manufacturer production material: Cast iron GG 25. No independent material certificate inferred.

250 bar is the documented series-heading reference, not a maximum complete-cylinder assembly rating.

No minimum-batch triangle is present beside this exact selected row, checked by native glyph bbox and original pixels.

Original OEM sectional drawing only; no supplier photograph or exact supplied seal/bushing execution is represented.

## Source-page index

Source page numbers below are physical pages of each complete original PDF. The original printed page labels and technical content remain unchanged. Compiled page numbers count this cover/index.

## Source A: Naldoni e Biondi NBT cylinder heads - exact article reference

| Original pages | Compiled pages | Relevant content |
|---|---|---|
| 9 | 2 | Unchanged original manufacturer drawing, material/series-pressure headings and exact model row. |
| 11 | 3 | Unchanged original manufacturer drawing, material/series-pressure headings and exact model row. |

## > 250 bar

**> Materiale di produzione:**
Ghisa GG 25

**> Production material :**
Cast iron GG 25

**> Materiale di produzione *:**
Alluminio

**> Production material * :**
Alluminium

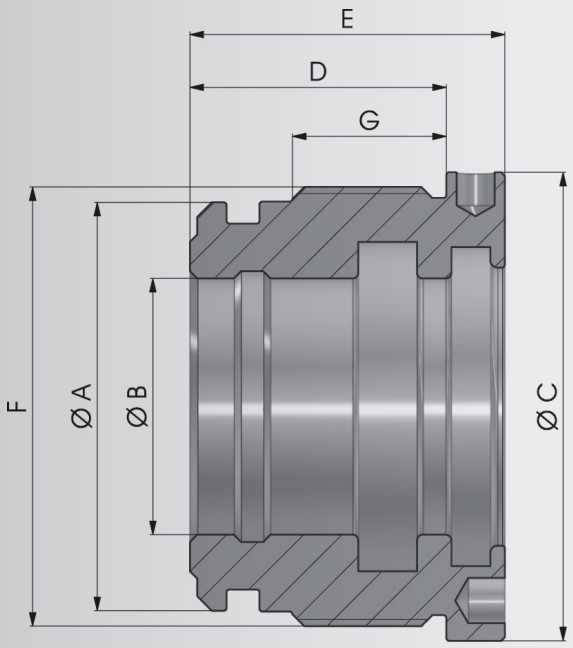


| COD. | A | B | C | D | E | F | G |
|---|---|---|---|---|---|---|---|
| NBT003502516* | 25 | 16 | 35 | 12 | 30 | M28X1.5 | 12 |
| NBT03502516G | 25 | 16 | 35 | 24 | 30 | M28X1.5 | 13 |
| NBT004003016* | 30 | 16 | 40 | 27 | 33 | M34X1.5 | 15 |
| NBT04003016G | 30 | 16 | 40 | 27 | 33 | M34X1.5 | 14 |
| NBT04003020G | 30 | 20 | 40 | 27 | 33 | M34X1.5 | 14 |
| NBT004203216 | 32 | 16 | 42 | 27 | 33 | M36X1.5 | 15 |
| NBT004203218 | 32 | 18 | 42 | 27 | 33 | M36X1.5 | 15 |
| NBT004203220 | 32 | 20 | 42 | 27 | 33 | M36X1.5 | 15 |
| NBT004503520 | 35 | 20 | 44 | 32 | 40 | M39X1.5 | 19 |
| NBT004503522 | 35 | 22 | 44 | 32 | 40 | M39X1.5 | 19 |
| NBT005004020 | 40 | 20 | 49 | 32 | 40 | M44X1.5 | 19 |
| NBT005004022 | 40 | 22 | 49 | 32 | 40 | M44X1.5 | 19 |
| NBT005004025 | 40 | 25 | 49 | 32 | 40 | M44X1.5 | 19 |

# Testata / Head

| COD. | A | B | C | D | E | F | G |
|---|---|---|---|---|---|---|---|
| NBT008007030 | 70 | 30 | 79 | 40 | 50 | M74X1.5 | 27 |
| NBT008007032 | 70 | 32 | 79 | 40 | 50 | M74X1.5 | 27 |
| NBT008007035 | 70 | 35 | 79 | 40 | 50 | M74X1.5 | 27 |
| NBT008007036 | 70 | 36 | 79 | 40 | 50 | M74X1.5 | 27 |
| NBT008007040 | 70 | 40 | 79 | 40 | 50 | M74X1.5 | 27 |
| NBT008007045 | 70 | 45 | 79 | 40 | 50 | M74X1.5 | 27 |
| NBT008007050 | 70 | 50 | 79 | 40 | 50 | M74X1.5 | 27 |
| NBT009007530 | 75 | 30 | 89 | 50 | 60 | M80X2 | 33 |
| NBT009007535 | 75 | 35 | 89 | 50 | 60 | M80X2 | 33 |
| NBT009007540 | 75 | 40 | 89 | 50 | 60 | M80X2 | 33 |
| NBT009007545 | 75 | 45 | 89 | 50 | 60 | M80X2 | 33 |
| NBT009008030 | 80 | 30 | 89 | 50 | 60 | M84x1.5 | 33 |
| NBT009008035 | 80 | 35 | 89 | 50 | 60 | M84x1.5 | 33 |
| NBT009008040 | 80 | 40 | 89 | 50 | 60 | M84x1.5 | 33 |
| NBT009008045 | 80 | 45 | 89 | 50 | 60 | M84x1.5 | 33 |
| NBT009008050 | 80 | 50 | 89 | 50 | 60 | M84x1.5 | 33 |
| NBT009208035 | 80 | 35 | 92 | 50 | 60 | M85X2 | 33 |
| NBT009208040 | 80 | 40 | 92 | 50 | 60 | M85X2 | 33 |
| NBT009208045 | 80 | 45 | 92 | 50 | 60 | M85X2 | 33 |
| NBT009208050 | 80 | 50 | 92 | 50 | 60 | M85X2 | 33 |
| NBT009208055 | 80 | 55 | 92 | 50 | 60 | M85X2 | 33 |
| NBT009208056 | 80 | 56 | 92 | 50 | 60 | M85X2 | 33 |
| NBT009208060 | 80 | 60 | 92 | 50 | 60 | M85X2 | 33 |
| NBT009508030 | 80 | 30 | 94 | 50 | 60 | M85X2 | 33 |
| NBT009508035 | 80 | 35 | 94 | 50 | 60 | M85X2 | 33 |
| NBT009508036 | 80 | 36 | 94 | 50 | 60 | M85X2 | 33 |
| NBT009508040 | 80 | 40 | 94 | 50 | 60 | M85X2 | 33 |
| NBT009508045 | 80 | 45 | 94 | 50 | 60 | M85X2 | 33 |
| NBT009508050 | 80 | 50 | 94 | 50 | 60 | M85X2 | 33 |
| NBT009508055 | 80 | 55 | 94 | 50 | 60 | M85X2 | 33 |
| NBT009508056 | 80 | 56 | 94 | 50 | 60 | M85X2 | 33 |
| NBT009508060 | 80 | 60 | 94 | 50 | 60 | M85X2 | 33 |
| NBT010008535 | 85 | 35 | 99 | 50 | 60 | M90X2 | 33 |
| NBT010008540 | 85 | 40 | 99 | 50 | 60 | M90X2 | 33 |
| NBT010008545 | 85 | 45 | 99 | 50 | 60 | M90X2 | 33 |

▸ a richiesta su lotto minimo / on request on a minimum batch