Naldoni e Biondi NBT009208035 hydraulic cylinder head

Manufacturer: Naldoni e Biondi

Manufacturer part number / published order designation: NBT009208035

Published model: NBT009208035

About this compilation

Prepared by Hydmaster from selected manufacturer documentation. Original technical pages follow without cropped drawings, rewritten data or altered units. This cover and index are Hydmaster editorial material, not a manufacturer-issued exact-execution datasheet.

Coverage: selected pages relevant to the identified size and configuration. Other options or neighbouring models retained on an original page apply only where explicitly identified.

Execution notes and conditions

Exact literal NBT009208035 manufacturer row on physical11/printed10; no generated code or alias.

Selected GAPI own product card names NALDONI and the exact Referencia; cached identity evidence, no stock or delivery claim.

Manufacturer production material: Cast iron GG 25. No independent material certificate inferred.

250 bar is the documented series-heading reference, not a maximum complete-cylinder assembly rating.

No minimum-batch triangle is present beside this exact selected row, checked by native glyph bbox and original pixels.

Original OEM sectional drawing only; no supplier photograph or exact supplied seal/bushing execution is represented.

Source-page index

Source page numbers below are physical pages of each complete original PDF. The original printed page labels and technical content remain unchanged. Compiled page numbers count this cover/index.

Source A: Naldoni e Biondi NBT cylinder heads - exact article reference

Original pages	Compiled pages	Relevant content
9	2	Unchanged original manufacturer drawing, material/series-pressure headings and exact model row.
11	3	Unchanged original manufacturer drawing, material/series-pressure headings and exact model row.

> 250 bar

> Materiale di produzione:
Ghisa GG 25

> Production material :
Cast iron GG 25

> Materiale di produzione *:
Alluminio

> Production material * :
Alluminium

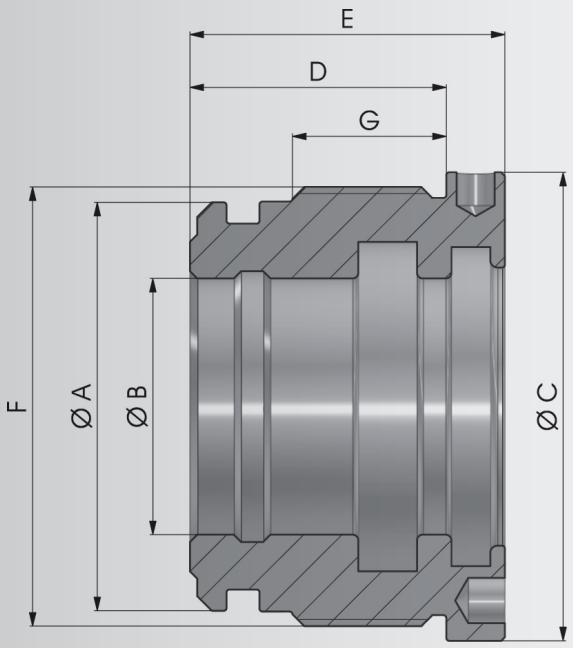

COD.	A	B	C	D	E	F	G
NBT003502516*	25	16	35	12	30	M28X1.5	12
NBT03502516G	25	16	35	24	30	M28X1.5	13
NBT004003016*	30	16	40	27	33	M34X1.5	15
NBT04003016G	30	16	40	27	33	M34X1.5	14
NBT04003020G	30	20	40	27	33	M34X1.5	14
NBT004203216	32	16	42	27	33	M36X1.5	15
NBT004203218	32	18	42	27	33	M36X1.5	15
NBT004203220	32	20	42	27	33	M36X1.5	15
NBT004503520	35	20	44	32	40	M39X1.5	19
NBT004503522	35	22	44	32	40	M39X1.5	19
NBT005004020	40	20	49	32	40	M44X1.5	19
NBT005004022	40	22	49	32	40	M44X1.5	19
NBT005004025	40	25	49	32	40	M44X1.5	19

Testata / Head

COD.	A	B	C	D	E	F	G
NBT008007030	70	30	79	40	50	M74X1.5	27
NBT008007032	70	32	79	40	50	M74X1.5	27
NBT008007035	70	35	79	40	50	M74X1.5	27
NBT008007036	70	36	79	40	50	M74X1.5	27
NBT008007040	70	40	79	40	50	M74X1.5	27
NBT008007045	70	45	79	40	50	M74X1.5	27
NBT008007050	70	50	79	40	50	M74X1.5	27
NBT009007530	75	30	89	50	60	M80X2	33
NBT009007535	75	35	89	50	60	M80X2	33
NBT009007540	75	40	89	50	60	M80X2	33
NBT009007545	75	45	89	50	60	M80X2	33
NBT009008030	80	30	89	50	60	M84x1.5	33
NBT009008035	80	35	89	50	60	M84x1.5	33
NBT009008040	80	40	89	50	60	M84x1.5	33
NBT009008045	80	45	89	50	60	M84x1.5	33
NBT009008050	80	50	89	50	60	M84x1.5	33
NBT009208035	80	35	92	50	60	M85X2	33
NBT009208040	80	40	92	50	60	M85X2	33
NBT009208045	80	45	92	50	60	M85X2	33
NBT009208050	80	50	92	50	60	M85X2	33
NBT009208055	80	55	92	50	60	M85X2	33
NBT009208056	80	56	92	50	60	M85X2	33
NBT009208060	80	60	92	50	60	M85X2	33
NBT009508030	80	30	94	50	60	M85X2	33
NBT009508035	80	35	94	50	60	M85X2	33
NBT009508036	80	36	94	50	60	M85X2	33
NBT009508040	80	40	94	50	60	M85X2	33
NBT009508045	80	45	94	50	60	M85X2	33
NBT009508050	80	50	94	50	60	M85X2	33
NBT009508055	80	55	94	50	60	M85X2	33
NBT009508056	80	56	94	50	60	M85X2	33
NBT009508060	80	60	94	50	60	M85X2	33
NBT010008535	85	35	99	50	60	M90X2	33
NBT010008540	85	40	99	50	60	M90X2	33
NBT010008545	85	45	99	50	60	M90X2	33

▸ a richiesta su lotto minimo / on request on a minimum batch