Naldoni e Biondi NBT007006036 hydraulic cylinder head

Manufacturer: Naldoni e Biondi

Manufacturer part number / published order designation: NBT007006036

Published model: NBT007006036

About this compilation

Prepared by Hydmaster from selected manufacturer documentation. Original technical pages follow without cropped drawings, rewritten data or altered units. This cover and index are Hydmaster editorial material, not a manufacturer-issued exact-execution datasheet.

Coverage: selected pages relevant to the identified size and configuration. Other options or neighbouring models retained on an original page apply only where explicitly identified.

Execution notes and conditions

Exact literal NBT007006036 manufacturer row on physical10/printed9; no generated code or alias.

Selected GAPI own product card names NALDONI and the exact Referencia; cached identity evidence, no stock or delivery claim.

Manufacturer production material: Cast iron GG 25. No independent material certificate inferred.

250 bar is the documented series-heading reference, not a maximum complete-cylinder assembly rating.

Exact row has a manufacturer minimum-batch triangle; batch quantity is unspecified.

Original OEM sectional drawing only; no supplier photograph or exact supplied seal/bushing execution is represented.

Source-page index

Source page numbers below are physical pages of each complete original PDF. The original printed page labels and technical content remain unchanged. Compiled page numbers count this cover/index.

Source A: Naldoni e Biondi NBT cylinder heads - exact article reference

Original pages	Compiled pages	Relevant content
9-10	2-3	Unchanged original manufacturer drawing, material/series-pressure headings and exact model row.

> 250 bar

> Materiale di produzione:
Ghisa GG 25

> Production material :
Cast iron GG 25

> Materiale di produzione *:
Alluminio

> Production material * :
Alluminium

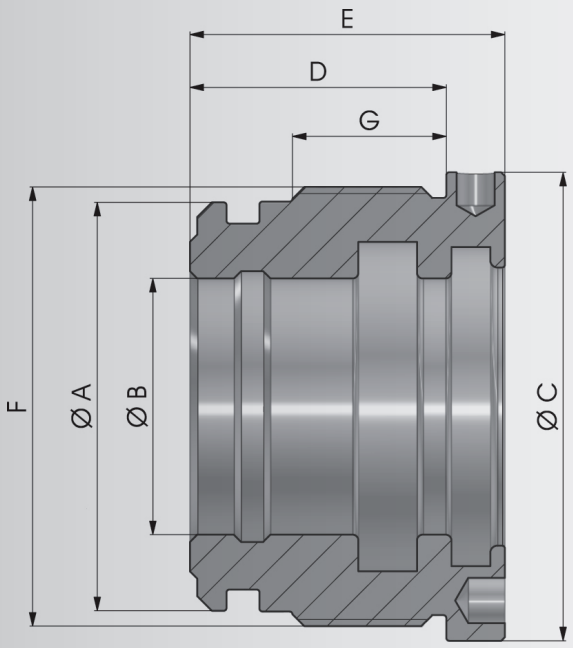

COD.	A	B	C	D	E	F	G
NBT003502516*	25	16	35	12	30	M28X1.5	12
NBT03502516G	25	16	35	24	30	M28X1.5	13
NBT004003016*	30	16	40	27	33	M34X1.5	15
NBT04003016G	30	16	40	27	33	M34X1.5	14
NBT04003020G	30	20	40	27	33	M34X1.5	14
NBT004203216	32	16	42	27	33	M36X1.5	15
NBT004203218	32	18	42	27	33	M36X1.5	15
NBT004203220	32	20	42	27	33	M36X1.5	15
NBT004503520	35	20	44	32	40	M39X1.5	19
NBT004503522	35	22	44	32	40	M39X1.5	19
NBT005004020	40	20	49	32	40	M44X1.5	19
NBT005004022	40	22	49	32	40	M44X1.5	19
NBT005004025	40	25	49	32	40	M44X1.5	19

COD.	A	B	C	D	E	F	G
NBT005004028	40	28	49	32	40	M44X1.5	19
NBT005504520	45	20	54	32	40	M49X1.5	19
NBT005504522	45	22	54	32	40	M49X1.5	19
NBT005504525	45	25	54	32	40	M49X1.5	19
NBT006005020	50	20	59	35	43	M54X1.5	22
NBT006005025	50	25	59	35	43	M54X1.5	22
NBT006005028	50	28	59	35	43	M54X1.5	22
NBT006005030	50	30	59	35	43	M54X1.5	22
NBT006005032	50	32	59	35	43	M54X1.5	22
NBT006005035	50	35	59	35	43	M54X1.5	22
NBT006005036	50	36	59	35	43	M54X1.5	22
NBT006505525	55	25	64	35	43	M60X1.5	21
NBT006505530	55	30	64	35	43	M60X1.5	21
NBT006505535	55	35	64	35	43	M60X1.5	21
NBT007006025	60	25	69	40	50	M64X1.5	27
▸ NBT007006028	60	28	69	40	50	M64X1.5	27
NBT007006030	60	30	69	40	50	M64X1.5	27
NBT007006032	60	32	69	40	50	M64X1.5	27
NBT007006035	60	35	69	40	50	M64X1.5	27
▸ NBT007006036	60	36	69	40	50	M64X1.5	27
NBT007006040	60	40	69	40	50	M64X1.5	27
NBT007006045	60	45	69	40	50	M64X1.5	27
NBT007306330	63	30	73	40	50	M68X1.5	25
NBT007306332	63	32	73	40	50	M68X1.5	25
NBT007306335	63	35	73	40	50	M68X1.5	25
NBT007306336	63	36	73	40	50	M68X1.5	25
NBT007306340	63	40	73	40	50	M68X1.5	25
NBT007306345	63	45	73	40	50	M68X1.5	25
NBT007506530	65	30	74	40	50	M69X1.5	25
▸ NBT007506532	65	32	74	40	50	M69X1.5	25
NBT007506535	65	35	74	40	50	M69X1.5	25
▸ NBT007506536	65	36	74	40	50	M69X1.5	25
NBT007506540	65	40	74	40	50	M69X1.5	25
NBT007506545	65	45	74	40	50	M69X1.5	25
NBT008007025	70	25	79	40	50	M74X1.5	27

▸ a richiesta su lotto minimo / on request on a minimum batch