Naldoni e Biondi NBT004503522 hydraulic cylinder head

Manufacturer: Naldoni e Biondi

Manufacturer part number / published order designation: NBT004503522

Published model: NBT004503522

About this compilation

Prepared by Hydmaster from selected manufacturer documentation. Original technical pages follow without cropped drawings, rewritten data or altered units. This cover and index are Hydmaster editorial material, not a manufacturer-issued exact-execution datasheet.

Coverage: selected pages relevant to the identified size and configuration. Other options or neighbouring models retained on an original page apply only where explicitly identified.

Execution notes and conditions

Exact literal NBT004503522 manufacturer row on physical9/printed8; no generated code or alias.

Selected GAPI own product card names NALDONI and the exact Referencia; cached identity evidence, no stock or delivery claim.

Manufacturer production material: Cast iron GG 25. No independent material certificate inferred.

250 bar is the documented series-heading reference, not a maximum complete-cylinder assembly rating.

No minimum-batch triangle is present beside this exact selected row, checked by native glyph bbox and original pixels.

Original OEM sectional drawing only; no supplier photograph or exact supplied seal/bushing execution is represented.

Source-page index

Source page numbers below are physical pages of each complete original PDF. The original printed page labels and technical content remain unchanged. Compiled page numbers count this cover/index.

Source A: Naldoni e Biondi NBT cylinder heads - exact article reference

Original pages	Compiled pages	Relevant content
9	2	Unchanged original manufacturer drawing, material/series-pressure headings and exact model row.

> 250 bar

> Materiale di produzione:
Ghisa GG 25

> Production material :
Cast iron GG 25

> Materiale di produzione *:
Alluminio

> Production material * :
Alluminium

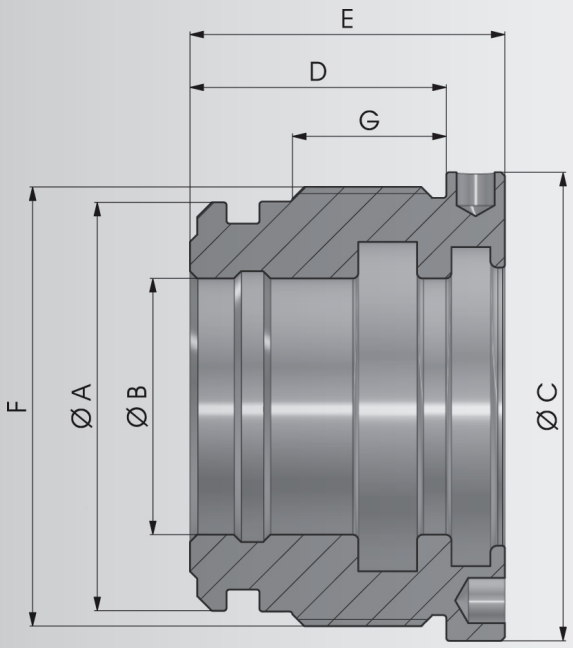

COD.	A	B	C	D	E	F	G
NBT003502516*	25	16	35	12	30	M28X1.5	12
NBT03502516G	25	16	35	24	30	M28X1.5	13
NBT004003016*	30	16	40	27	33	M34X1.5	15
NBT04003016G	30	16	40	27	33	M34X1.5	14
NBT04003020G	30	20	40	27	33	M34X1.5	14
NBT004203216	32	16	42	27	33	M36X1.5	15
NBT004203218	32	18	42	27	33	M36X1.5	15
NBT004203220	32	20	42	27	33	M36X1.5	15
NBT004503520	35	20	44	32	40	M39X1.5	19
NBT004503522	35	22	44	32	40	M39X1.5	19
NBT005004020	40	20	49	32	40	M44X1.5	19
NBT005004022	40	22	49	32	40	M44X1.5	19
NBT005004025	40	25	49	32	40	M44X1.5	19