Naldoni e Biondi NBSN90CE female-threaded spherical rod end

Manufacturer: Naldoni e Biondi

Part number: NBSN90CE

Specifications

Female-threaded spherical rod end, SN-CE.

Bearing bore: 90 mm; overall height: 296 mm; mounting thread: M72 × 3.

Bearing contact: steel on steel.

Production material designation: C45 steel. Confirm the bearing-insert grade.

Lubrication: lubricatable.

Mass: 19.10 kg.

Confirm allowable load, articulation limits, thread handedness and mating-thread compatibility for the application.

Available on request, subject to a minimum order batch.

Manufacturer documentation

Technical reference	Pages in this PDF
Dimensional drawings and model data	2

Technical documentation: Naldoni e Biondi manufacturer catalogue.

Terminale a snodo SN-CE / Ball joint end SN-CE

> **Materiale di produzione:** Acciaio C45
> **Production material:** Steel C45

> **CDA:** Carico dinamico ammesso
> **CDA:** Max. dynamic load

> **Tipo:** Lubrificabile
> **Type:** Lubricatable

> **Accoppiamento:** Acciaio su acciaio
> **Coupling:** Steel on steel

> ***:** Non lubrificabile
> ***:** Not lubricatable

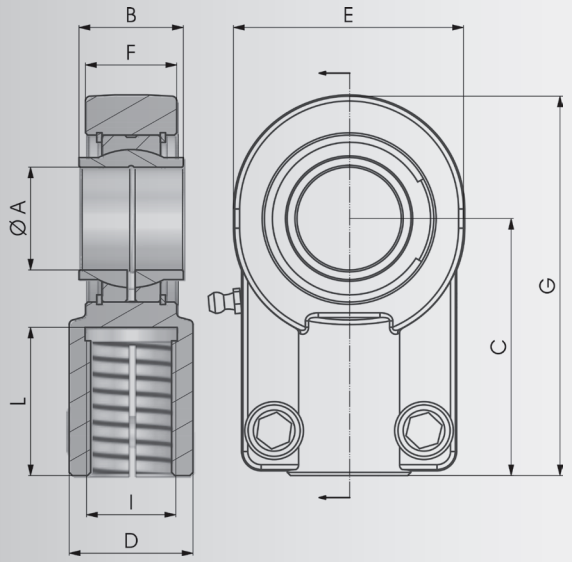

COD.	A	B	C	D	E	F	G	I	L	CDA	Kg
▸ NBSN12CE*	12	12	38	16	32	11	54	M12X1.25	17	10.8	0,11
▸ NBSN16CE	16	16	44	21	40	14	64	M14X1.5	19	17.6	0,20
▸ NBSN20CE	20	20	52	25	47	17.8	75	M16X1.5	23	30	0,35
▸ NBSN25CE	25	25	65	30	58	22	96	M20X1.5	29	48	0,62
▸ NBSN32CE	32	32	80	38	71	28	118.5	M27X2	37	67	1,15
▸ NBSN40CE	40	40	97	47	90	33	146	M33X2	46	100	2,18
▸ NBSN50CE	50	50	120	58	109	41	149.5	M42X2	57	156	3,96
▸ NBSN63CE	63	63	140	70	136	53	211	M48X2	64	255	6,80
▸ NBSN70CE	70	70	160	80	155	57	245	M56X2	76	315	9,60
▸ NBSN80CE	80	80	180	90	170	67	270	M64X3	86	400	13,00
▸ NBSN90CE	90	90	195	100	185	72	296	M72X3	91	490	19,10
▸ NBSN100CE	100	100	210	110	211	85	322	M80X3	96	610	25,00
▸ NBSN110CE	110	110	235	125	235	88	364	M90X3	106	655	32,00
▸ NBSN125CE	125	125	260	135	265	103	405	M100X3	113	950	46,00

▸ a richiesta su lotto minimo / on request on a minimum batch