Naldoni e Biondi NBSN80P weld-on spherical cylinder end

Manufacturer: Naldoni e Biondi

Manufacturer part number / published order designation: NBSN80P

Published model: NBSN80P

About this compilation

Prepared by Hydmaster from selected manufacturer documentation. Original technical pages follow without cropped drawings, rewritten data or altered units. This cover and index are Hydmaster editorial material, not a manufacturer-issued exact-execution datasheet.

Coverage: selected pages relevant to the identified size and configuration. Other options or neighbouring models retained on an original page apply only where explicitly identified.

Execution notes and conditions

The exact manufacturer designation is matched to the selected supplier MPN and its own stock-model dimensional row. The original section shows a complete spherical-bearing insert inside the housing, not a bare eye or loose insert. The supplier brand is absent (--); the listing proves an offered catalogue designation, not independent authentication of an individual supplied unit.

Naldoni e Biondi NBSN80P is a complete SN-P spherical joint end for weld-on cylinder rear-end mounting. The manufacturer section shows the spherical bearing insert inside its housing, and the selected supplier lists the component as a weldable cylinder end. It is not a bare fixed eye or a separate unmounted bearing.

All articles in this batch are documented as lubricatable. Production-material wording does not establish a separate bearing-insert grade. No ununitized Cda or supplier-only static load, pressure, welded-assembly capacity or welding-procedure rating is assigned. The genuine family photograph is representative and does not certify dimensions, lubrication hardware or supplied revision.

Source-page index

Source page numbers below are physical pages of each complete original PDF. The original printed page labels and technical content remain unchanged. Compiled page numbers count this cover/index.

Source A: Complete relevant original page with exact row, sphericalinsert section and material/lubrication notes

Original pages	Compiled pages	Relevant content
112	2	Complete relevant original page with exact row, sphericalinsert section and material/lubrication notes

Terminale a snodo SN-P / Ball joint end SN-P

> **Materiale di produzione:** Acciaio S355
> **Production material:** S355 Steel

> **CDA:** Carico dinamico ammesso
> **CDA:** Max. dynamic load

> **Tipo:** Lubrificabile
> **Type:** Lubricatable

> **Accoppiamento:** Acciaio su acciaio
> **Coupling:** Steel on steel

> ***:** Pantografato
> ***:** Panthographed

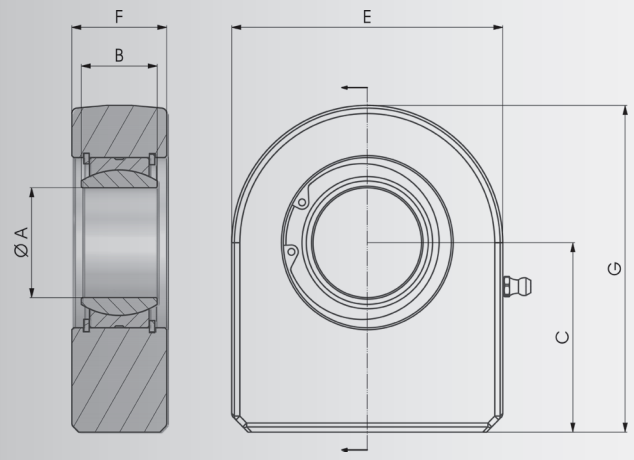

COD.	A	B	C	E	F	G	CDA	Kg
NBSN15P	15	12	31	45	16	53.5	17	0,23
NBSN16P	16	14	35	48	17.5	59	18	0,30
NBSN17P	17	14	35	48	17.5	59	18	0,30
NBSN20P	20	16	38	50	19	63	30	0,36
NBSN25P	25	20	45	55	23	72.5	48	0,53
NBSN30P	30	22	51	65	28	83.5	62	0,85
NBSN35P	35	25	61	83	30	102.5	80	1,50
NBSN40P	40	28	69	100	35	119	100	2,40
NBSN45P	45	32	77	110	40	132	127	3,39
NBSN50P	50	35	88	123	40	149.5	156	4,24
NBSN60P	60	44	100	140	50	170	245	7,10
NBSN70P	70	49	115	164	55	197	315	10,70
NBSN80P	80	55	141	180	60	231	400	15,10
▸ NBSN90P	90	60	150	226	65	263	490	23,40
▸ NBSN100P	100	70	170	250	70	295	610	33,10
▸ NBSN110P*	110	70	185	295	80	332.5	655	48,50
▸ NBSN120P*	120	85	210	360	90	390	950	79,50

▸ a richiesta su lotto minimo / on request on a minimum batch