# Naldoni e Biondi NBSN40S female-threaded spherical rod end

Manufacturer: Naldoni e Biondi

Part number: NBSN40S

## Specifications

Female-threaded spherical rod end, SN-S.

Bearing bore: 40 mm; overall height: 153 mm; mounting thread: M27 × 2.

Bearing contact: steel on steel.

Production material designation: C45 steel. Confirm the bearing-insert grade.

Lubrication: lubricatable.

Mass: 2.16 kg.

Confirm allowable load, articulation limits, thread handedness and mating-thread compatibility for the application.

Available on request, subject to a minimum order batch.

## Manufacturer documentation

| Technical reference | Pages in this PDF |
|---|---|
| Dimensional drawings and model data | 2 |

Technical documentation: Naldoni e Biondi manufacturer catalogue.

# NBSN...S

# Terminale a snodo SN-S / Ball joint end SN-S

> **Materiale di produzione:** Acciaio C45
> **Production material:** Steel C45

> **CDA:** Carico dinamico ammesso
> **CDA:** Max. dynamic load

> **Tipo:** Lubrificabile
> **Type:** Lubricatable

> **Accoppiamento:** Acciaio su acciaio
> **Coupling:** Steel on steel

> *: Non lubrificabile
> *: Not lubricatable

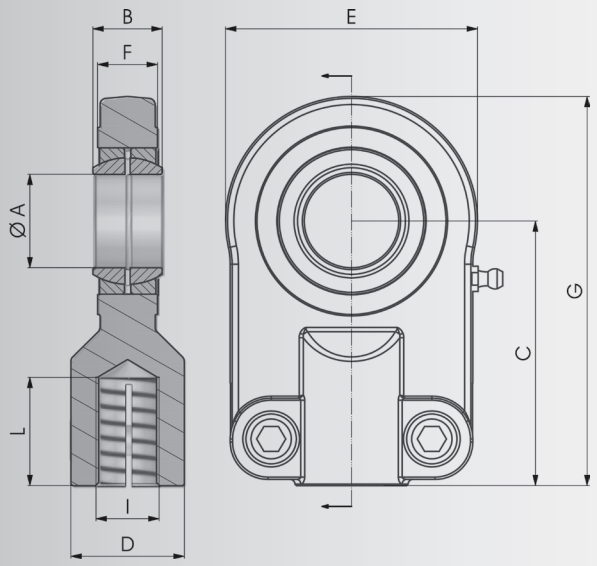


| COD. | A | B | C | D | E | F | G | I | L | CDA | Kg |
|---|---|---|---|---|---|---|---|---|---|---|---|
| ▸ NBSN12S* | 12 | 10 | 42 | 17 | 35 | 8 | 58 | M10X1.25 | 15 | 10.8 | 0,12 |
| ▸ NBSN16S | 16 | 14 | 48 | 21 | 45 | 11 | 69 | M12X1.25 | 17 | 21.1 | 0,22 |
| ▸ NBSN20S | 20 | 16 | 58 | 25 | 55 | 13 | 83 | M14X1.5 | 19 | 30 | 0,43 |
| ▸ NBSN25S | 25 | 20 | 68 | 30 | 65 | 17 | 99 | M16X1.5 | 23 | 48 | 0,67 |
| ▸ NBSN30S | 30 | 22 | 85 | 36 | 80 | 19 | 123 | M20X1.5 | 29 | 62 | 1,25 |
| ▸ NBSN40S | 40 | 28 | 105 | 45 | 100 | 23 | 153 | M27X2 | 37 | 100 | 2,16 |
| ▸ NBSN50S | 50 | 35 | 130 | 55 | 120 | 30 | 188 | M33X2 | 46 | 156 | 3,90 |
| ▸ NBSN60S | 60 | 44 | 150 | 68 | 160 | 38 | 255 | M42X2 | 57 | 245 | 7,15 |
| ▸ NBSN80S | 80 | 55 | 185 | 90 | 205 | 47 | 282,5 | M48X2 | 64 | 400 | 15,00 |
| ▸ NBSN100S | 100 | 70 | 240 | 110 | 240 | 55 | 357,5 | M64X3 | 86 | 610 | 27,30 |

▸ a richiesta su lotto minimo / on request on a minimum batch