Naldoni e Biondi NBSN30PF63 weld-on spherical cylinder end with end plug

Manufacturer: Naldoni e Biondi

Manufacturer part number / published order designation: NBSN30PF63

Published model: NBSN30PF63

About this compilation

Prepared by Hydmaster from selected manufacturer documentation. Original technical pages follow without cropped drawings, rewritten data or altered units. This cover and index are Hydmaster editorial material, not a manufacturer-issued exact-execution datasheet.

Coverage: selected pages relevant to the identified size and configuration. Other options or neighbouring models retained on an original page apply only where explicitly identified.

Execution notes and conditions

Complete literal article row on original physical119/printed118. Original complete page with insert/end-plug section and notes must be retained.

Supplier exact selected article and stock row agree; supplier brand is blank (--), so unit authenticity is not independently confirmed.

Genuine supplier photograph is representative family imagery, shared across dimensions.

Exact catalogue row marks minimum-batch-on-request. No delivery, pressure, welded assembly capacity, numerical load or bearing-insert steel grade inferred.

Source-page index

Source page numbers below are physical pages of each complete original PDF. The original printed page labels and technical content remain unchanged. Compiled page numbers count this cover/index.

Source A: Naldoni e Biondi SN-PF spherical cylinder ends with end plug

Original pages	Compiled pages	Relevant content
119	2	Complete relevant unchanged original page with exact article rows, section and source footnote

NBSN...PF

Terminale a snodo con fondello SN-PF / Ball joint end with end plug SN-PF

> **Materiale di produzione:** Acciaio S355
> **Production material:** Steel S355

> **CDA:** Carico dinamico ammesso
> **CDA:** Max. dynamic load

> **Tipo:** Lubrificabile
> **Type:** Lubricatable

> **Accoppiamento:** Acciaio su acciaio
> **Coupling:** Steel on steel

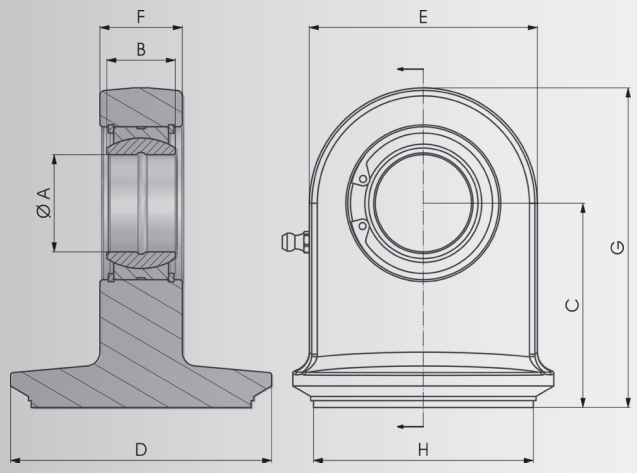

COD.	A	B	C	D	E	F	G	H	CDA	Kg
▸ NBSN20PF35	20	16	48,5	45	50	19	73,5	35	30	0,46
▸ NBSN20PF40	20	16	48,5	50	50	19	73,5	40	30	0,49
▸ NBSN20PF45	20	16	48,5	55	50	19	73,5	45	30	0,48
▸ NBSN25PF50	25	20	57,5	60	55	23	85	50	48	0,79
▸ NBSN25PF55	25	20	57,5	65	55	23	85	55	48	0,79
▸ NBSN30PF60	30	22	63,5	70	65	28	96	60	62	1,18
▸ NBSN30PF63	30	22	63,5	73	65	28	96	63	62	1,20
▸ NBSN30PF65	30	22	63,5	75	65	28	96	65	62	1,24
▸ NBSN35PF70	35	25	73,5	80	83	30	115	70	80	1,92
▸ NBSN35PF75	35	25	73,5	90	83	30	115	75	80	2,06
▸ NBSN35PF80	35	25	73,5	95	83	30	115	80	80	2,12
▸ NBSN35PF80-1	35	25	73,5	90	83	30	115	80	80	2,11
▸ NBSN40PF80	40	28	84,5	95	100	35	134,5	80	100	3,60
▸ NBSN40PF85	40	28	84,5	100	100	35	134,5	85	100	3,19
▸ NBSN40PF90	40	28	84,5	105	100	35	134,5	90	100	3,28
▸ NBSN40PF100	40	28	84,5	115	100	35	134,5	100	100	3,55
▸ NBSN50PF110	50	35	106,5	130	123	40	168	110	156	6,29
▸ NBSN50PF120	50	35	106,5	140	123	40	168	120	156	6,99
▸ NBSN50PF125	50	35	106,5	145	123	40	168	125	156	6,56

▸ a richiesta su lotto minimo / on request on a minimum batch