# Naldoni e Biondi NBSN30GAS female-threaded spherical rod end

Manufacturer: Naldoni e Biondi

Part number: NBSN30GAS

## Specifications

Female-threaded spherical rod end, SN-GAS.

Bearing bore: 30 mm; overall height: 109 mm; mounting thread: M24 × 2.

Bearing contact: steel on steel.

Production material designation: C45 steel. Confirm the bearing-insert grade.

Lubrication: lubricatable.

Mass: 0.88 kg.

Confirm allowable load, articulation limits, thread handedness and mating-thread compatibility for the application.

Available on request, subject to a minimum order batch.

## Manufacturer documentation

| Technical reference | Pages in this PDF |
|---|---|
| Dimensional drawings and model data | 2 |

Technical documentation: Naldoni e Biondi manufacturer catalogue.

# NBSN...GAS

# Terminale a snodo SN-GAS / Ball joint end SN-GAS

> **Materiale di produzione:** Acciaio C45
> **Production material:** Steel C45

> **CDA:** Carico dinamico ammesso
> **CDA:** Max. dynamic load

> **Tipo:** Lubrificabile
> **Type:** Lubricatable

> **Accoppiamento:** Acciaio su acciaio
> **Coupling:** Steel on steel

> ***:** Ghisa sferoidale
> ***:** Spheroidal cast Iron

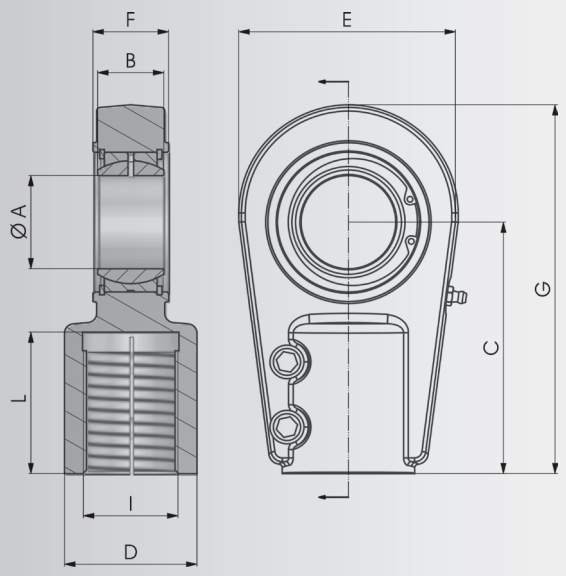


| COD. | A | B | C | D | E | F | G | I | L | CDA | Kg |
|---|---|---|---|---|---|---|---|---|---|---|---|
| ▸ NBSN25GAS | 25 | 20 | 65 | 28 | 56 | 23 | 95 | M18X2 | 30 | 48 | 0,62 |
| ▸ NBSN30GAS | 30 | 22 | 75 | 34 | 64 | 28 | 109 | M24X2 | 35 | 62 | 0,88 |
| ▸ NBSN35GAS | 35 | 25 | 90 | 45 | 78 | 30 | 132 | M30X2 | 46 | 80 | 1,52 |
| ▸ NBSN40GAS | 40 | 28 | 105 | 56.5 | 94 | 35 | 155 | M39X3 | 56 | 100 | 2,43 |
| ▸ NBSN50GAS* | 50 | 35 | 135 | 70 | 116 | 40 | 198 | M50X3 | 76 | 156 | 4,75 |

▸ a richiesta su lotto minimo / on request on a minimum batch