Naldoni e Biondi NBSN25U female-threaded spherical rod end

Manufacturer: Naldoni e Biondi

Part number: NBSN25U

Specifications

Female-threaded spherical rod end, SN-U.

Bearing bore: 25 mm; overall height: 80 mm; mounting thread: M16 × 1.5.

Bearing contact: steel on steel.

Production material designation: C45 steel. Confirm the bearing-insert grade.

Lubrication: lubricatable.

Mass: 0.47 kg.

Confirm allowable load, articulation limits, thread handedness and mating-thread compatibility for the application.

Available on request, subject to a minimum order batch.

Manufacturer documentation

Technical reference	Pages in this PDF
Dimensional drawings and model data	2

Technical documentation: Naldoni e Biondi manufacturer catalogue.

NBSN...U

Terminale a snodo SN-U / Ball joint end SN-U

> **Materiale di produzione:** Acciaio C45
> **Production material:** Steel C45

> **CDA:** Carico dinamico ammesso
> **CDA:** Max. dynamic load

> **Tipo:** Lubrificabile
> **Type:** Lubricatable

> **Accoppiamento:** Acciaio su acciaio
> **Coupling:** Steel on steel

> *: Ghisa sferoidale
> *: Spheroidal cast Iron

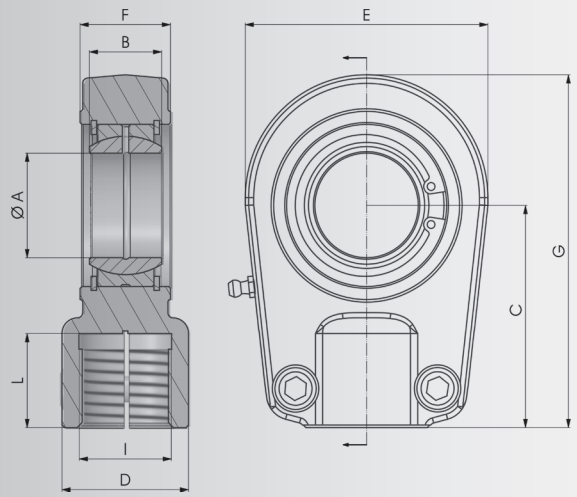

COD.	A	B	C	D	E	F	G	I	L	CDA	Kg
▸ NBSN20U	20	16	50	25	56	19	80	M16X1.5	17	30	0,44
▸ NBSN25U	25	20	50	25	56	23	80	M16X1.5	17	48	0,47
▸ NBSN30U	30	22	60	32	64	28	94	M22X1.5	23	62	0,77
▸ NBSN35U	35	25	70	40	78	30	112	M28X1.5	29	80	1,24
▸ NBSN40U	40	28	85	49	94	35	135	M35X1.5	36	100	2,12
▸ NBSN50U	50	35	105	61	116	40	168	M45X1.5	46	156	3,74
▸ NBSN60U	60	44	130	75	130	50	200	M58X1.5	59	245	6,49
▸ NBSN70U	70	49	150	86	154	55	232	M65X1.5	66	315	9,88
▸ NBSN80U	80	55	170	105	176	60	265	M80X2	81	400	14,20
▸ NBSN90U	90	60	210	124	206	65	322	M100X2	101	490	20,00
▸ NBSN100U	100	70	235	138	230	70	360	M110X2	111	610	27,50
▸ NBSN110U	110	70	265	152	265	80	407	M120X3	125	655	45,60
▸ NBSN120U*	120	85	310	172	340	90	490	M130X3	135	950	72,00

▸ a richiesta su lotto minimo / on request on a minimum batch