Naldoni e Biondi NBSN25GAS female-threaded spherical rod end

Manufacturer: Naldoni e Biondi

Part number: NBSN25GAS

Specifications

Female-threaded spherical rod end, SN-GAS.

Bearing bore: 25 mm; overall height: 95 mm; mounting thread: M18 × 2.

Bearing contact: steel on steel.

Production material designation: C45 steel. Confirm the bearing-insert grade.

Lubrication: lubricatable.

Mass: 0.62 kg.

Confirm allowable load, articulation limits, thread handedness and mating-thread compatibility for the application.

Available on request, subject to a minimum order batch.

Manufacturer documentation

Technical reference	Pages in this PDF
Dimensional drawings and model data	2

Technical documentation: Naldoni e Biondi manufacturer catalogue.

NBSN...GAS

Terminale a snodo SN-GAS / Ball joint end SN-GAS

> **Materiale di produzione:** Acciaio C45
> **Production material:** Steel C45

> **CDA:** Carico dinamico ammesso
> **CDA:** Max. dynamic load

> **Tipo:** Lubrificabile
> **Type:** Lubricatable

> **Accoppiamento:** Acciaio su acciaio
> **Coupling:** Steel on steel

> ***:** Ghisa sferoidale
> ***:** Spheroidal cast Iron

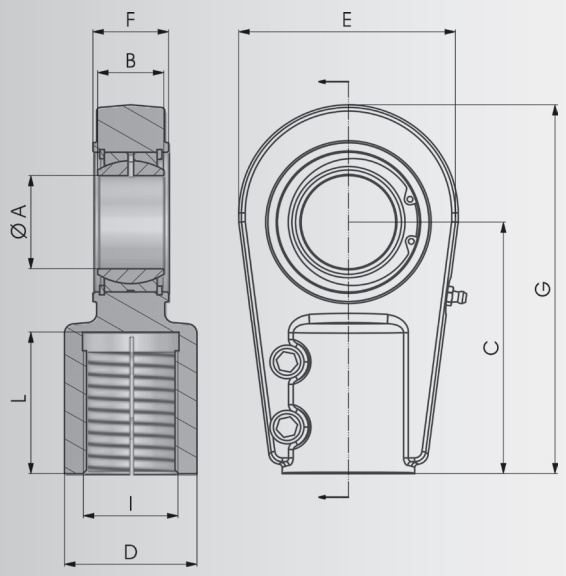

COD.	A	B	C	D	E	F	G	I	L	CDA	Kg
▸ NBSN25GAS	25	20	65	28	56	23	95	M18X2	30	48	0,62
▸ NBSN30GAS	30	22	75	34	64	28	109	M24X2	35	62	0,88
▸ NBSN35GAS	35	25	90	45	78	30	132	M30X2	46	80	1,52
▸ NBSN40GAS	40	28	105	56.5	94	35	155	M39X3	56	100	2,43
▸ NBSN50GAS*	50	35	135	70	116	40	198	M50X3	76	156	4,75

▸ a richiesta su lotto minimo / on request on a minimum batch