Naldoni e Biondi NBSN20S female-threaded spherical rod end

Manufacturer: Naldoni e Biondi

Part number: NBSN20S

Specifications

Female-threaded spherical rod end, SN-S.

Bearing bore: 20 mm; overall height: 83 mm; mounting thread: M14 × 1.5.

Bearing contact: steel on steel.

Production material designation: C45 steel. Confirm the bearing-insert grade.

Lubrication: lubricatable.

Mass: 0.43 kg.

Confirm allowable load, articulation limits, thread handedness and mating-thread compatibility for the application.

Available on request, subject to a minimum order batch.

Manufacturer documentation

Technical reference	Pages in this PDF
Dimensional drawings and model data	2

Technical documentation: Naldoni e Biondi manufacturer catalogue.

NBSN...S

Terminale a snodo SN-S / Ball joint end SN-S

> **Materiale di produzione:** Acciaio C45
> **Production material:** Steel C45

> **CDA:** Carico dinamico ammesso
> **CDA:** Max. dynamic load

> **Tipo:** Lubrificabile
> **Type:** Lubricatable

> **Accoppiamento:** Acciaio su acciaio
> **Coupling:** Steel on steel

> *: Non lubrificabile
> *: Not lubricatable

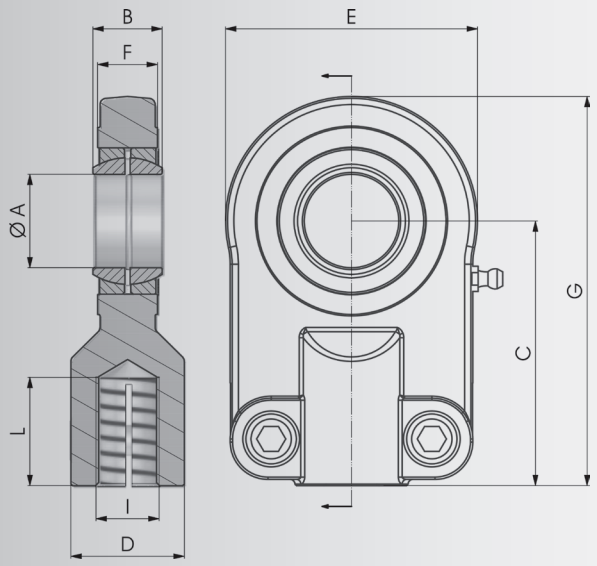

COD.	A	B	C	D	E	F	G	I	L	CDA	Kg
▸ NBSN12S*	12	10	42	17	35	8	58	M10X1.25	15	10.8	0,12
▸ NBSN16S	16	14	48	21	45	11	69	M12X1.25	17	21.1	0,22
▸ NBSN20S	20	16	58	25	55	13	83	M14X1.5	19	30	0,43
▸ NBSN25S	25	20	68	30	65	17	99	M16X1.5	23	48	0,67
▸ NBSN30S	30	22	85	36	80	19	123	M20X1.5	29	62	1,25
▸ NBSN40S	40	28	105	45	100	23	153	M27X2	37	100	2,16
▸ NBSN50S	50	35	130	55	120	30	188	M33X2	46	156	3,90
▸ NBSN60S	60	44	150	68	160	38	255	M42X2	57	245	7,15
▸ NBSN80S	80	55	185	90	205	47	282,5	M48X2	64	400	15,00
▸ NBSN100S	100	70	240	110	240	55	357,5	M64X3	86	610	27,30

▸ a richiesta su lotto minimo / on request on a minimum batch