# Naldoni e Biondi NBSN16CE female-threaded spherical rod end

Manufacturer: Naldoni e Biondi

Part number: NBSN16CE

## Specifications

Female-threaded spherical rod end, SN-CE.

Bearing bore: 16 mm; overall height: 64 mm; mounting thread: M14 × 1.5.

Bearing contact: steel on steel.

Production material designation: C45 steel. Confirm the bearing-insert grade.

Lubrication: lubricatable.

Mass: 0.20 kg.

Confirm allowable load, articulation limits, thread handedness and mating-thread compatibility for the application.

Available on request, subject to a minimum order batch.

## Manufacturer documentation

| Technical reference | Pages in this PDF |
|---|---|
| Dimensional drawings and model data | 2 |

Technical documentation: Naldoni e Biondi manufacturer catalogue.

# Terminale a snodo SN-CE / Ball joint end SN-CE

> **Materiale di produzione:** Acciaio C45
> **Production material:** Steel C45

> **CDA:** Carico dinamico ammesso
> **CDA:** Max. dynamic load

> **Tipo:** Lubrificabile
> **Type:** Lubricatable

> **Accoppiamento:** Acciaio su acciaio
> **Coupling:** Steel on steel

> ***:** Non lubrificabile
> ***:** Not lubricatable

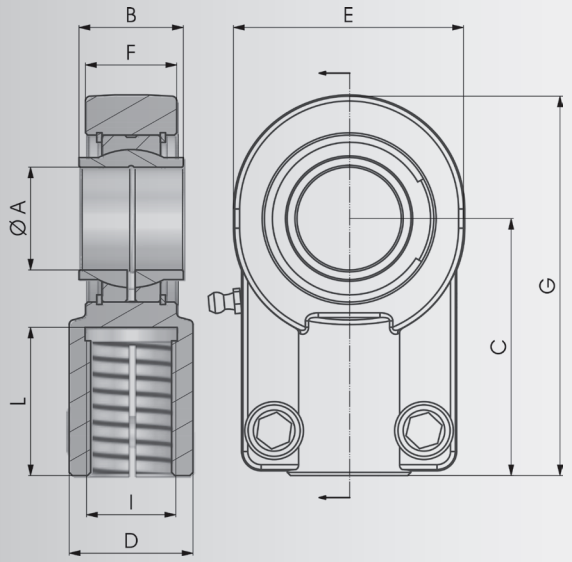


| COD. | A | B | C | D | E | F | G | I | L | CDA | Kg |
|---|---|---|---|---|---|---|---|---|---|---|---|
| ▸ NBSN12CE* | 12 | 12 | 38 | 16 | 32 | 11 | 54 | M12X1.25 | 17 | 10.8 | 0,11 |
| ▸ NBSN16CE | 16 | 16 | 44 | 21 | 40 | 14 | 64 | M14X1.5 | 19 | 17.6 | 0,20 |
| ▸ NBSN20CE | 20 | 20 | 52 | 25 | 47 | 17.8 | 75 | M16X1.5 | 23 | 30 | 0,35 |
| ▸ NBSN25CE | 25 | 25 | 65 | 30 | 58 | 22 | 96 | M20X1.5 | 29 | 48 | 0,62 |
| ▸ NBSN32CE | 32 | 32 | 80 | 38 | 71 | 28 | 118.5 | M27X2 | 37 | 67 | 1,15 |
| ▸ NBSN40CE | 40 | 40 | 97 | 47 | 90 | 33 | 146 | M33X2 | 46 | 100 | 2,18 |
| ▸ NBSN50CE | 50 | 50 | 120 | 58 | 109 | 41 | 149.5 | M42X2 | 57 | 156 | 3,96 |
| ▸ NBSN63CE | 63 | 63 | 140 | 70 | 136 | 53 | 211 | M48X2 | 64 | 255 | 6,80 |
| ▸ NBSN70CE | 70 | 70 | 160 | 80 | 155 | 57 | 245 | M56X2 | 76 | 315 | 9,60 |
| ▸ NBSN80CE | 80 | 80 | 180 | 90 | 170 | 67 | 270 | M64X3 | 86 | 400 | 13,00 |
| ▸ NBSN90CE | 90 | 90 | 195 | 100 | 185 | 72 | 296 | M72X3 | 91 | 490 | 19,10 |
| ▸ NBSN100CE | 100 | 100 | 210 | 110 | 211 | 85 | 322 | M80X3 | 96 | 610 | 25,00 |
| ▸ NBSN110CE | 110 | 110 | 235 | 125 | 235 | 88 | 364 | M90X3 | 106 | 655 | 32,00 |
| ▸ NBSN125CE | 125 | 125 | 260 | 135 | 265 | 103 | 405 | M100X3 | 113 | 950 | 46,00 |

▸ a richiesta su lotto minimo / on request on a minimum batch