Naldoni e Biondi NBSN110L weld-on spherical cylinder end

Manufacturer: Naldoni e Biondi

Manufacturer part number / published order designation: NBSN110L

Published model: NBSN110L

About this compilation

Prepared by Hydmaster from selected manufacturer documentation. Original technical pages follow without cropped drawings, rewritten data or altered units. This cover and index are Hydmaster editorial material, not a manufacturer-issued exact-execution datasheet.

Coverage: selected pages relevant to the identified size and configuration. Other options or neighbouring models retained on an original page apply only where explicitly identified.

Execution notes and conditions

The exact manufacturer designation is matched to the selected supplier MPN and its own stock-model dimensional row. The original section shows a complete spherical-bearing insert inside the housing, not a bare eye or loose insert. The supplier brand is absent (--); the listing proves an offered catalogue designation, not independent authentication of an individual supplied unit.

Naldoni e Biondi NBSN110L is a complete SN-L spherical joint end for weld-on cylinder rear-end mounting. The manufacturer section shows the spherical bearing insert inside its housing, and the selected supplier lists the component as a weldable cylinder end. It is not a bare fixed eye or a separate unmounted bearing.

All articles in this batch are documented as lubricatable. Production-material wording does not establish a separate bearing-insert grade. No ununitized Cda or supplier-only static load, pressure, welded-assembly capacity or welding-procedure rating is assigned. The genuine family photograph is representative and does not certify dimensions, lubrication hardware or supplied revision.

On request on a minimum batch, as marked by the current catalogue. No current stock or delivery claim.

Exact row asterisk means Pantographed in the current manufacturer legend. It is not a lubrication exception or an alternate ordering suffix.

Source-page index

Source page numbers below are physical pages of each complete original PDF. The original printed page labels and technical content remain unchanged. Compiled page numbers count this cover/index.

Source A: Complete relevant original page with exact row, sphericalinsert section and material/lubrication notes

Original pages	Compiled pages	Relevant content
117	2	Complete relevant original page with exact row, sphericalinsert section and material/lubrication notes

Terminale a snodo SN-L / Ball joint end SN-L

> **Materiale di produzione:** Acciaio S355
> **Production material:** Steel S355

> **CDA:** Carico dinamico ammesso
> **CDA:** Max. dynamic load

> **Tipo:** Lubrificabile
> **Type:** Lubricatable

> **Accoppiamento:** Acciaio su acciaio
> **Coupling:** Steel on steel

> *: Pantografato
> *: Panthographed

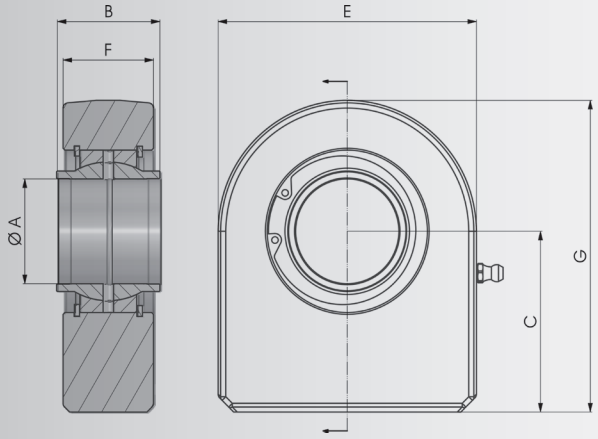

COD.	A	B	C	E	F	G	CDA	Kg
▸ NBSN20L	20	20	38	50	19	63	30	0,36
▸ NBSN25L	25	25	45	55	23	72.5	48	0,54
▸ NBSN32L	32	32	65	70	27	103	62.5	1,12
▸ NBSN40L	40	40	69	100	35	119	100	2,50
▸ NBSN50L	50	50	88	123	40	149.5	156	4,60
▸ NBSN63L	63	63	107	145	50	178	248	9,30
▸ NBSN70L	70	70	115	164	55	197	315	11,25
▸ NBSN80L	80	80	141	180	60	231	400	15,75
▸ NBSN90L	90	90	150	226	65	263	490	24,00
▸ NBSN100L	100	100	170	250	70	295	610	33,95
▸ NBSN110L*	110	110	185	295	80	332.5	655	49,00
▸ NBSN120L*	125	125	210	360	90	390	950	81,00

▸ a richiesta su lotto minimo / on request on a minimum batch