Naldoni e Biondi NBSN100N female-threaded spherical rod end

Manufacturer: Naldoni e Biondi

Part number: NBSN100N

Specifications

Female-threaded spherical rod end, SN-N.

Bearing bore: 100 mm; overall height: 360 mm; mounting thread: M110 × 2.

Bearing contact: steel on steel.

Production material designation: C45 steel. Confirm the bearing-insert grade.

Lubrication: lubricatable.

Mass: 32.00 kg.

Confirm allowable load, articulation limits, thread handedness and mating-thread compatibility for the application.

Available on request, subject to a minimum order batch.

Manufacturer documentation

Technical reference	Pages in this PDF
Dimensional drawings and model data	2

Technical documentation: Naldoni e Biondi manufacturer catalogue.

NBSN...N

Terminale a snodo SN-N / Ball joint end SN-N

> **Materiale di produzione:** Acciaio C45
> **Production material:** Steel C45

> **CDA:** Carico dinamico ammesso
> **CDA:** Max. dynamic load

> **Tipo:** Lubrificabile
> **Type:** Lubricatable

> **Accoppiamento:** Acciaio su acciaio
> **Coupling:** Steel on steel

> ***:** Ghisa sferoidale
> ***:** Spheroidal cast Iron

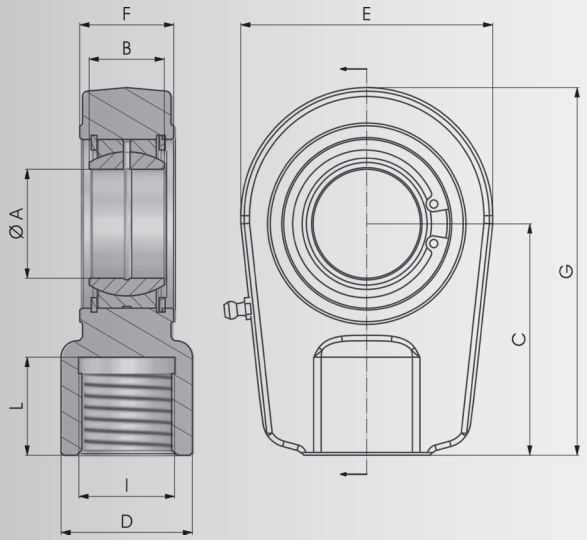

COD.	A	B	C	D	E	F	G	I	L	CDA	Kg
▸ NBSN20N	20	16	50	25	56	19	80	M16X1.5	17	30	0,45
▸ NBSN25N	25	20	50	25	56	23	80	M16X1.5	17	48	0,49
▸ NBSN30N	30	22	60	32	64	28	94	M22X1.5	23	62	0,76
▸ NBSN35N	35	25	70	40	78	30	112	M28X1.5	29	80	1,26
▸ NBSN40N	40	28	85	49	94	35	135	M35X1.5	36	100	2,15
▸ NBSN50N	50	35	105	61	116	40	168	M45X1.5	46	156	3,80
▸ NBSN60N	60	44	130	75	130	50	200	M58X1.5	59	245	6,23
▸ NBSN70N	70	49	150	86	154	55	232	M65X1.5	66	315	9,83
▸ NBSN80N	80	55	170	105	176	60	265	M80X2	81	400	13,97
▸ NBSN90N	90	60	210	124	206	65	322	M100X2	101	490	23,20
▸ NBSN100N	100	70	235	138	230	70	360	M110X2	111	610	32,00
▸ NBSN110N	110	70	265	152	265	80	407	M120X3	125	655	39,23
▸ NBSN120N*	120	85	310	172	340	90	490	M130X3	135	950	72,00

▸ a richiesta su lotto minimo / on request on a minimum batch