Naldoni e Biondi NBMNTLG1/4 long male half nipple

Manufacturer: Naldoni e Biondi

Manufacturer part number / published order designation: NBMNTLG1/4

Published model: NBMNTLG1/4

About this compilation

Prepared by Hydmaster from selected manufacturer documentation. Original technical pages follow without cropped drawings, rewritten data or altered units. This cover and index are Hydmaster editorial material, not a manufacturer-issued exact-execution datasheet.

Coverage: selected pages relevant to the identified size and configuration. Other options or neighbouring models retained on an original page apply only where explicitly identified.

Execution notes and conditions

Actual selected supplier article NBMNTLG1/4 matched to the exact printed manufacturer row; no generated ordering combination.

Supplier brand field is --; observed article designation is not independent supplied-unit authentication.

Male half-nipple: do not equate it with a female cylinder port. No ISO-thread, 60-degree cone, pressure, flow or weld-assembly rating established.

Representative genuine supplier photograph may be shared between sizes; original selected row and section are the dimensional reference.

Source-page index

Source page numbers below are physical pages of each complete original PDF. The original printed page labels and technical content remain unchanged. Compiled page numbers count this cover/index.

Source A: Naldoni e Biondi short and long male half nipples, exact catalogue rows and sections

Original pages	Compiled pages	Relevant content
94	2	Complete original physical94/printed93; selected exact short/long row, not the whole catalogue

NBMNTCG

Mezzo niples corto / Short half nipple

> **Materiale di produzione:**
Acciaio S355J2C

> **Production material :**
Steel S355J2C

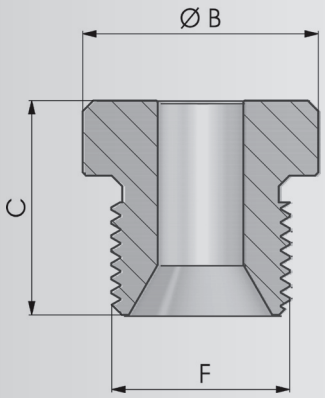

COD.	F	C	B	Kg
NBMNTCG1/4	1/4"	18	19	0,02
NBMNTCG3/8	3/8"	20	22	0,03
NBMNTCG1/2	1/2"	23	27	0,05

NBMNTLG

Mezzo niples lungo / Long half nipple

> **Materiale di produzione:**
Acciaio S355J2C

> **Production material :**
Steel S355J2C

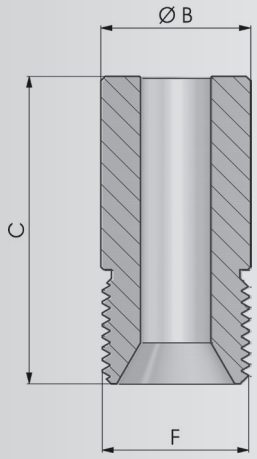

COD.	F	C	B	Kg
NBMNTLG1/4	1/4"	25	15	0,02
NBMNTLG3/8	3/8"	35	17	0,04
NBMNTLG1/2	1/2"	35	21	0,06