Naldoni e Biondi NBFS00000016 weldable U-shaped cylinder fork

Manufacturer: Naldoni e Biondi

Manufacturer part number / published order designation: NBFS00000016

Published model: NBFS00000016

About this compilation

Prepared by Hydmaster from selected manufacturer documentation. Original technical pages follow without cropped drawings, rewritten data or altered units. This cover and index are Hydmaster editorial material, not a manufacturer-issued exact-execution datasheet.

Coverage: selected pages relevant to the identified size and configuration. Other options or neighbouring models retained on an original page apply only where explicitly identified.

Execution notes and conditions

The complete manufacturer article number, including every zero, is printed in the original NBFS table and matches the selected supplier MPN and its own stock-model dimensional row. The supplier brand field is absent (--); this is evidence of an offered catalogue designation, not authentication of an individual supplied unit.

Naldoni e Biondi NBFS00000016 is a U-shaped weldable fork for hydraulic-cylinder fabrication, documented in steel S235JR. Its two parallel ears have a 16.2 mm pin bore A and a 16 mm internal fork opening G. H is the square base size, B the overall height, C the base-to-bore-centre distance and E the top-to-bore-centre distance. D is retained with its original catalogue drawing label.

The weldable U-shaped NBFS fork is distinct from the adjacent NBFFIL threaded fork and from a single-eye terminal. No structural load, fatigue, pin-fit tolerance, cylinder pressure or welding-procedure rating is inferred. The genuine shared supplier photograph is representative and does not establish exact size, material grade, finish or supplied revision.

Source-page index

Source page numbers below are physical pages of each complete original PDF. The original printed page labels and technical content remain unchanged. Compiled page numbers count this cover/index.

Source A: Original exact NBFS rows and U-shaped weldable fork drawing; adjacent NBFFIL threaded fork is a separate family.

Original pages	Compiled pages	Relevant content
48	2	Original exact NBFS rows and U-shaped weldable fork drawing; adjacent NBFFIL threaded fork is a separate family.

NBFS

Forcella a saldare / Weldable fork

> **Materiale di produzione:**
Acciaio S235JR

> **Production material :**
Steel S235JR

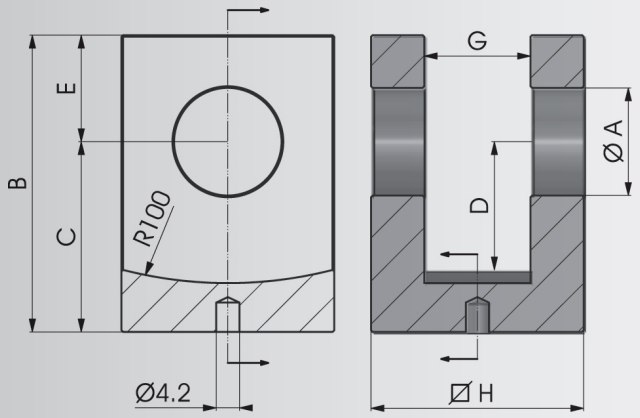

COD.	A	B	C	D	E	G	H	Kg
NBFS00000016	16.2	50	34	24	16	16	35	0,26
NBFS00000020	20.25	60	40	30	20	20	40	0,38
NBFS00000025	25.25	70	45	30	25	25	50	0,73

NBFFIL

Forcella filettata / Threaded fork

> **Materiale di produzione:**
Acciaio S235JR

> **Production material :**
Steel S235JR

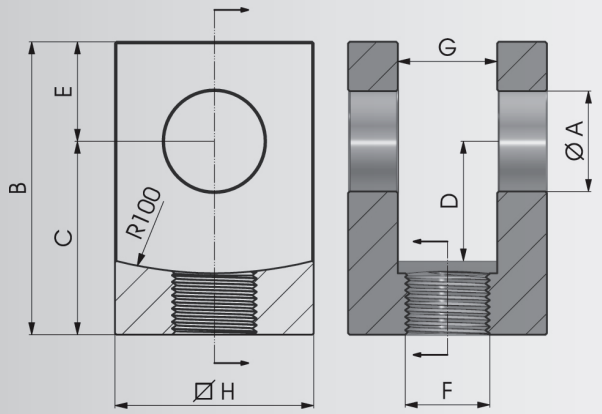

COD.	A	B	C	D	E	F	G	H	Kg
NBFFIL161615	16.2	55	39	24	16	M16X1.5	16	35	0,29
NBFFIL202015	20.25	65	45	30	20	M20X1.5	20	40	0,41
NBFFIL252420	25.25	75	50	30	25	M24X2	25	50	0,75