Naldoni e Biondi NBFLA0194115 hydraulic cylinder mounting flange

Manufacturer: Naldoni e Biondi

Manufacturer part number / published order designation: NBFLA0194115

Published model: NBFLA0194115

About this compilation

Prepared by Hydmaster from selected manufacturer documentation. Original technical pages follow without cropped drawings, rewritten data or altered units. This cover and index are Hydmaster editorial material, not a manufacturer-issued exact-execution datasheet.

Coverage: selected pages relevant to the identified size and configuration. Other options or neighbouring models retained on an original page apply only where explicitly identified.

Execution notes and conditions

The complete article identifier is printed in the original manufacturer row and appears in the selected supplier manufacturer-article-number field. The supplier brand field is blank; the offer documents an article designation, not independent authentication of the supplied unit.

The local PDF contains the complete relevant original manufacturer page with the exact article row and corresponding drawing. The photograph is a genuine representative family image; exact size, finish and supplied revision are not established by the photo.

No complete-cylinder pressure, structural capacity or independent material certification is inferred.

Source-page index

Source page numbers below are physical pages of each complete original PDF. The original printed page labels and technical content remain unchanged. Compiled page numbers count this cover/index.

Source A: Exact article table and matching original section drawing, one complete original physical page

Original pages	Compiled pages	Relevant content
53	2	Exact article table and matching original section drawing, one complete original physical page

Flangia / Flange

> **Materiale di produzione:**
Acciaio S355JR - ASTM A105

> **Production material :**
Steel S355JR - ASTM A105

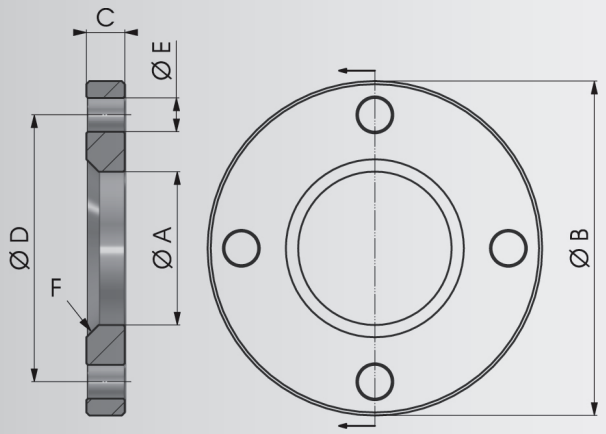

COD.	A	B	C	D	E	F	Kg
NBFLA0109050	50	109	12,5	87	4xØ11	4x45°	0,66
NBFLA0128060	60	128	14,5	105	4xØ13	4x45°	1,06
NBFLA0142070	70	142	16,5	117	4xØ13	5x45°	1,44
NBFLA0162080	80	162	16,5	127	4xØ15	5x45°	1,87

> **Materiale di produzione:**
Acciaio S355JR - ASTM A105

> **Production material :**
Steel S355JR - ASTM A105

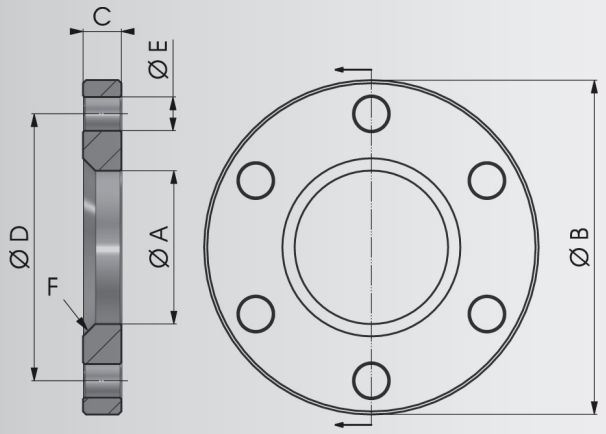

COD.	A	B	C	D	E	F	Kg
▸ NBFLA0181092	92	181	18,5	149	6xØ17	7x45°	2,49
NBFLA0181095	95	181	18,5	149	6xØ17	7x45°	2,40
NBFLA0194115	115	194	24,5	162	6xØ17	8x45°	3,28

▸ a richiesta su lotto minimo / on request on a minimum batch