Naldoni e Biondi NBFFILI202015 AISI 316L female-threaded cylinder clevis end

Manufacturer: Naldoni e Biondi

Manufacturer part number / published order designation: NBFFILI202015

Published model: NBFFILI202015

About this compilation

Prepared by Hydmaster from selected manufacturer documentation. Original technical pages follow without cropped drawings, rewritten data or altered units. This cover and index are Hydmaster editorial material, not a manufacturer-issued exact-execution datasheet.

Coverage: selected pages relevant to the identified size and configuration. Other options or neighbouring models retained on an original page apply only where explicitly identified.

Execution notes and conditions

Literal exact NBFFILI202015 factory row; no alias to carbon-steel NBFFIL/NBFS. Full original physical76/printed75.

Actual GAPI selected card explicitly names NALDONI and the exact Referencia. Availability/deferred-stock quantities and price are not imported.

AISI316L is the catalogue material designation, not independent material certification. Exact row marked on request subject to minimum batch; no pin inclusion/load/pressure/compatibility inferred.

Image is unchanged representative original manufacturer family drawing, not a photograph or exact-size rendering.

Source-page index

Source page numbers below are physical pages of each complete original PDF. The original printed page labels and technical content remain unchanged. Compiled page numbers count this cover/index.

Source A: Manufacturer technical reference

Original pages	Compiled pages	Relevant content
76	2	Relevant unchanged original page

NBFSI

Forcella a saldare / Weldable fork

> **Materiale di produzione:**
Acciaio inox AISI 316L

> **Production material :**
AISI 316 L-type stainless steel

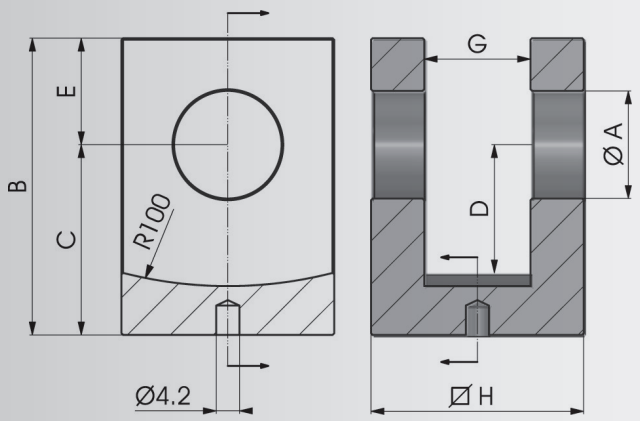

COD.	A	B	C	D	E	G	H	Kg
▸ NBFSI0000016	16.2	50	34	24	16	16	35	0,27
▸ NBFSI0000020	20.25	60	40	30	20	20	40	0,38
▸ NBFSI0000025	25.25	70	45	30	25	25	50	0,74

NBFFILI

Forcella filettata / Threaded fork

> **Materiale di produzione:**
Acciaio inox AISI 316L

> **Production material :**
AISI 316 L-type stainless steel

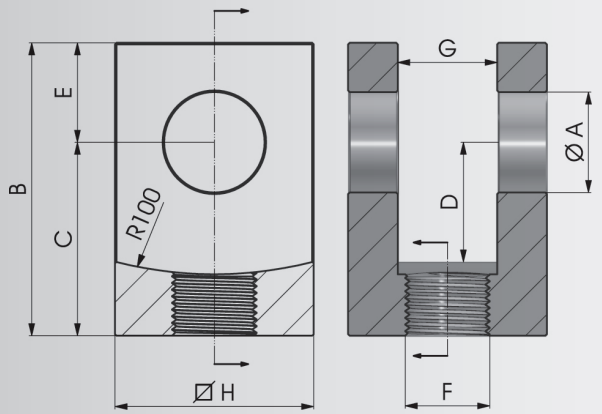

COD.	A	B	C	D	E	F	G	H	Kg
▸ NBFFILI161615	16.2	55	39	24	16	M16X1.5	16	35	0,30
▸ NBFFILI202015	20.25	65	45	30	20	M20X1.5	20	40	0,40
▸ NBFFILI252420	25.25	75	50	30	25	M24X2	25	50	0,77

▸ a richiesta su lotto minimo / on request on a minimum batch