Naldoni e Biondi NBFFIL252420 female-threaded cylinder fork end

Manufacturer: Naldoni e Biondi

Manufacturer part number / published order designation: NBFFIL252420

Published model: NBFFIL252420

About this compilation

Prepared by Hydmaster from selected manufacturer documentation. Original technical pages follow without cropped drawings, rewritten data or altered units. This cover and index are Hydmaster editorial material, not a manufacturer-issued exact-execution datasheet.

Coverage: selected pages relevant to the identified size and configuration. Other options or neighbouring models retained on an original page apply only where explicitly identified.

Execution notes and conditions

Exact literal article NBFFIL252420: lower NBFFIL threaded-fork section on original physical48/printed47; upper NBFS weldable section is a different family.

Every selected supplier stock-row dimension, thread and mass matches the original. Supplier brand is blank (--); no independently authenticated supplied unit.

S235JR is manufacturer production-material designation, not an independent material certificate. No pressure/load/pin inclusion/ISO conformity or stock claim. No minimum-batch note is assigned: none appears in this exact lower section.

Genuine shared threaded-fork family photo, not exact variant certification.

Source-page index

Source page numbers below are physical pages of each complete original PDF. The original printed page labels and technical content remain unchanged. Compiled page numbers count this cover/index.

Source A: Manufacturer technical reference

Original pages	Compiled pages	Relevant content
48	2	Relevant unchanged original page

NBFS

Forcella a saldare / Weldable fork

> **Materiale di produzione:**
Acciaio S235JR

> **Production material :**
Steel S235JR

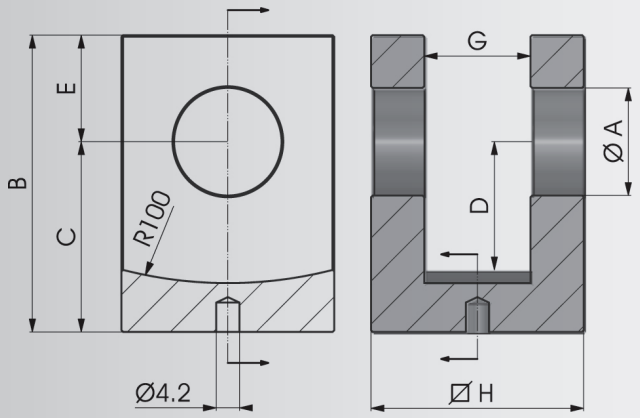

COD.	A	B	C	D	E	G	H	Kg
NBFS00000016	16.2	50	34	24	16	16	35	0,26
NBFS00000020	20.25	60	40	30	20	20	40	0,38
NBFS00000025	25.25	70	45	30	25	25	50	0,73

NBFFIL

Forcella filettata / Threaded fork

> **Materiale di produzione:**
Acciaio S235JR

> **Production material :**
Steel S235JR

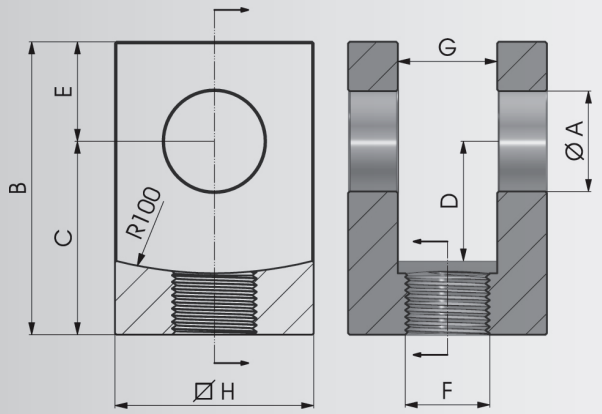

COD.	A	B	C	D	E	F	G	H	Kg
NBFFIL161615	16.2	55	39	24	16	M16X1.5	16	35	0,29
NBFFIL202015	20.25	65	45	30	20	M20X1.5	20	40	0,41
NBFFIL252420	25.25	75	50	30	25	M24X2	25	50	0,75