Naldoni e Biondi NBCF11348 female-threaded cylinder clevis end

Manufacturer: Naldoni e Biondi

Manufacturer part number / published order designation: NBCF11348

Published model: NBCF11348

About this compilation

Prepared by Hydmaster from selected manufacturer documentation. Original technical pages follow without cropped drawings, rewritten data or altered units. This cover and index are Hydmaster editorial material, not a manufacturer-issued exact-execution datasheet.

Coverage: selected pages relevant to the identified size and configuration. Other options or neighbouring models retained on an original page apply only where explicitly identified.

Execution notes and conditions

Exact article NBCF11348 is printed literally in the manufacturer table and selected supplier manufacturer field. All selected stock-row technical cells match; no code alias inferred.

Supplier brand is blank (--); no independently authenticated supplied unit. Manufacturer S355 production-material designation is not an independent material certificate.

Exact row is on request subject to minimum batch. No ISO15552 conformity, pressure/load, pin inclusion or mating compatibility is established.

Representative genuine threaded-clevis family photograph, not exact variant certification.

Source-page index

Source page numbers below are physical pages of each complete original PDF. The original printed page labels and technical content remain unchanged. Compiled page numbers count this cover/index.

Source A: Naldoni e Biondi threaded hydraulic-cylinder clevis reference

Original pages	Compiled pages	Relevant content
134	2	Complete original NBCF exact row, internal-thread and clevis drawing, material and minimum-batch notes.

Forcella per cerniera / Hinge fork

> **Materiale di produzione:**
Acciaio S355

> **Production material :**
Steel S355

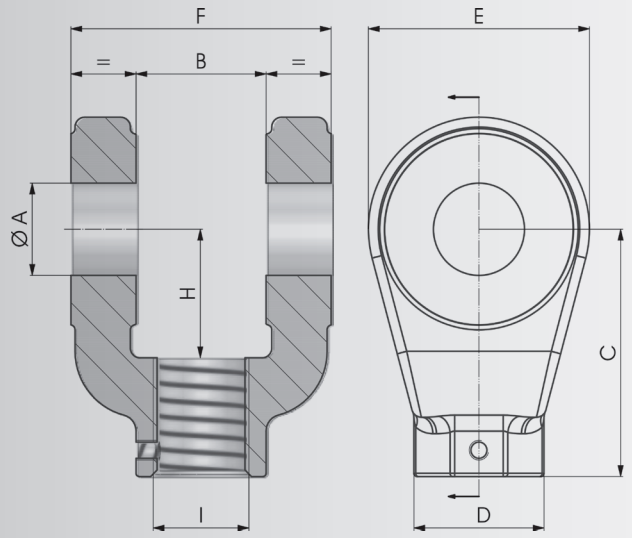

COD.	A	B	C	D	E	F	I	H	Kg
▸ NBCF11310	10	12	32	19	24	24	M10X1.25	13	0,10
▸ NBCF11312	12	16	36	21	34	32	M12X1.25	19	0,18
▸ NBCF11314	14	20	38	21	34	40	M14X1.5	19	0,23
▸ NBCF11316	20	30	54	32	58	60	M16X1.5	32	0,90
▸ NBCF11320	20	30	60	32	58	60	M20X1.5	32	0,91
▸ NBCF11327	28	40	75	40	68	80	M27X2	39	1,92
▸ NBCF11333	36	50	99	55	100	100	M33X2	54	4,92
▸ NBCF11342	45	60	113	60	106	120	M42X2	57	6,53
▸ NBCF11348	56	70	126	75	118	140	M48X2	63	10,11
▸ NBCF11364	70	80	168	95	156	160	M64X3	83	19,20
▸ NBCF11380	70	80	168	95	156	160	M80X3	83	18,42

▸ a richiesta su lotto minimo / on request on a minimum batch