Naldoni e Biondi NBBORSPM16 weld-on cylinder through-port

Manufacturer: Naldoni e Biondi

Manufacturer part number / published order designation: NBBORSPM16

Published model: NBBORSPM16

About this compilation

Prepared by Hydmaster from selected manufacturer documentation. Original technical pages follow without cropped drawings, rewritten data or altered units. This cover and index are Hydmaster editorial material, not a manufacturer-issued exact-execution datasheet.

Coverage: selected pages relevant to the identified size and configuration. Other options or neighbouring models retained on an original page apply only where explicitly identified.

Execution notes and conditions

The exact manufacturer article number is printed in the original table and matches the selected supplier MPN and its own stock-model technical row. The supplier brand is absent (--); the listing proves an offered catalogue designation, not independent authentication of an individual supplied unit.

Naldoni e Biondi NBBORSPM16 is a steel S355J2C through-port in the NBBORSPM cylinder-parts family. It is a weld-on oil-connection component for hydraulic-cylinder fabrication. The P section shows an axial through passage with a female-threaded entry. B is outside diameter and C overall height. The table also lists A, but the current P drawing does not label A; it is retained only as catalogue dimension A and is not interpreted as bore diameter or thread depth.

No working-pressure, flow, cylinder-load, sealing-interface or welding-procedure rating is inferred from this component table. Dimensions retain their original drawing references. The genuine supplier photograph is representative and may be shared between sizes or P/PL lengths; use the exact original row and section for geometry.

The P-family table includes dimension A without a corresponding drawing label. Its value is retained only as a catalogue dimension, not a bore diameter or thread depth.

Source-page index

Source page numbers below are physical pages of each complete original PDF. The original printed page labels and technical content remain unchanged. Compiled page numbers count this cover/index.

Source A: Exact rows, material statement and correct original section geometry, one complete original physical page

Original pages	Compiled pages	Relevant content
89	2	Exact rows, material statement and correct original section geometry, one complete original physical page

NBBORSPG

Borchia passante / Through-port

> **Materiale di produzione:**
Acciaio S355J2C

> **Production material :**
Steel S355J2C

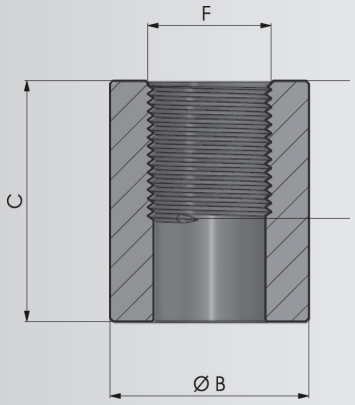

COD.	F	C	B	A	Kg
NBBORSPG1/4	1/4"	30	22	14	0,06
NBBORSPG3/8	3/8"	35	26	16	0,09
NBBORSPG1/2	1/2"	35	30	18	0,11

NBBORSPM

> **Materiale di produzione:**
Acciaio S355J2C

> **Production material :**
Steel S355J2C

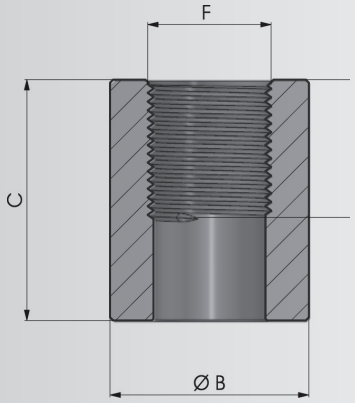

COD.	F	C	B	A	Kg
NBBORSPM16	M16X1.5	30	22	14	0,05
NBBORSPM18	M18X1.5	35	26	16	0,08
NBBORSPM22	M22X1.5	35	30	18	0,10