# Naldoni e Biondi NBBORSPLG1/4 weld-on cylinder long through-port

Manufacturer: Naldoni e Biondi

Manufacturer part number / published order designation: NBBORSPLG1/4

Published model: NBBORSPLG1/4

## About this compilation

Prepared by Hydmaster from selected manufacturer documentation. Original technical pages follow without cropped drawings, rewritten data or altered units. This cover and index are Hydmaster editorial material, not a manufacturer-issued exact-execution datasheet.

Coverage: selected pages relevant to the identified size and configuration. Other options or neighbouring models retained on an original page apply only where explicitly identified.

## Execution notes and conditions

The exact manufacturer article number is printed in the original table and matches the selected supplier MPN and its own stock-model technical row. The supplier brand is absent (--); the listing proves an offered catalogue designation, not independent authentication of an individual supplied unit.

Naldoni e Biondi NBBORSPLG1/4 is a steel S355J2C long through-port in the NBBORSPLG cylinder-parts family. It is a weld-on oil-connection component for hydraulic-cylinder fabrication. The PL section shows a longer axial through-port. B is outside diameter and C overall height. A is retained with its original catalogue drawing label. The longer PL execution is distinct from P even when the supplier uses the same representative photograph.

No working-pressure, flow, cylinder-load, sealing-interface or welding-procedure rating is inferred from this component table. Dimensions retain their original drawing references. The genuine supplier photograph is representative and may be shared between sizes or P/PL lengths; use the exact original row and section for geometry.

## Source-page index

Source page numbers below are physical pages of each complete original PDF. The original printed page labels and technical content remain unchanged. Compiled page numbers count this cover/index.

## Source A: Exact rows, material statement and correct original section geometry, one complete original physical page

| Original pages | Compiled pages | Relevant content |
|---|---|---|
| 90 | 2 | Exact rows, material statement and correct original section geometry, one complete original physical page |

# NBBORSPLG

## Borchia passante lunga / Long through-port

> **Materiale di produzione:**
Acciaio S355J2C

> **Production material :**
Steel S355J2C

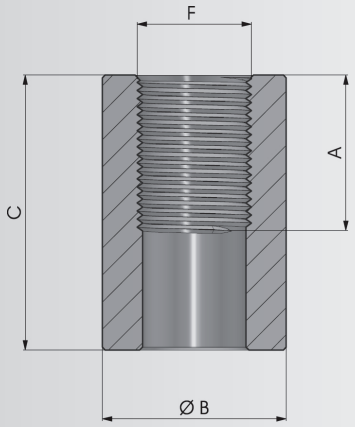


| COD. | F | C | B | A | Kg |
|---|---|---|---|---|---|
| NBBORSPLG1/4 | 1/4" | 40 | 22 | 28 | 0,08 |
| NBBORSPLG3/8 | 3/8" | 42 | 26 | 30 | 0,11 |
| NBBORSPLG1/2 | 1/2" | 50 | 30 | 35 | 0,15 |

# NBBORSPLM

> **Materiale di produzione:**
Acciaio S355J2C

> **Production material :**
Steel S355J2C

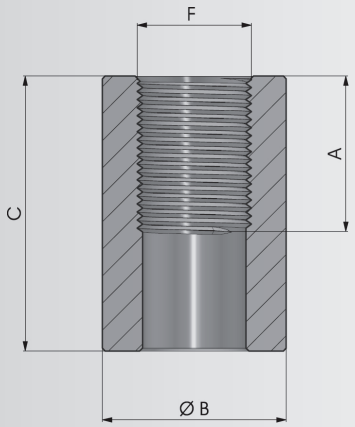


| COD. | F | C | B | A | Kg |
|---|---|---|---|---|---|
| NBBORSPLM16 | M16X1.5 | 40 | 22 | 28 | 0,06 |
| NBBORSPLM18 | M18X1.5 | 42 | 26 | 30 | 0,10 |
| NBBORSPLM22 | M22X1.5 | 50 | 30 | 35 | 0,14 |