# Naldoni e Biondi NBBORSGI1 stainless steel cylinder port boss

Manufacturer: Naldoni e Biondi

Manufacturer part number / published order designation: NBBORSGI1

Published model: NBBORSGI1

## About this compilation

Prepared by Hydmaster from selected manufacturer documentation. Original technical pages follow without cropped drawings, rewritten data or altered units. This cover and index are Hydmaster editorial material, not a manufacturer-issued exact-execution datasheet.

Coverage: selected pages relevant to the identified size and configuration. Other options or neighbouring models retained on an original page apply only where explicitly identified.

## Execution notes and conditions

Literal exact article NBBORSGI1 is printed on manufacturer physical78/printed77 and on the selected supplier own Product H1.

Nominal size F 1", outside diameter B 45 mm, height C 25 mm and mass 0.15 kg are the current factory table values. Manufacturer production-material designation AISI316L; no independent certificate inferred.

Supplier names NaldonieBiondi and agrees on nominal thread and outside diameter. No stock or delivery promise is imported.

No minimum-batch marker on this row. The sheet does not state ISO/BSP/NPT thread standard, taper, sealing method or pressure/weld/corrosion performance.

Original manufacturer NBBORSGI sectional drawing from physical page78; not a product photograph or an exact-variant finish guarantee.

## Source-page index

Source page numbers below are physical pages of each complete original PDF. The original printed page labels and technical content remain unchanged. Compiled page numbers count this cover/index.

## Source A: Exact NBBORSGI row, AISI316L material and internal-thread section withF/B/Cdimensions.

| Original pages | Compiled pages | Relevant content |
|---|---|---|
| 78 | 2 | Exact NBBORSGI row, AISI316L material and internal-thread section withF/B/Cdimensions. |

# NBBORSGI

# Borchia / Port

> **Materiale di produzione:**
Acciaio inox AISI 316L

> **Production material :**
AISI 316 L-type stainless steel

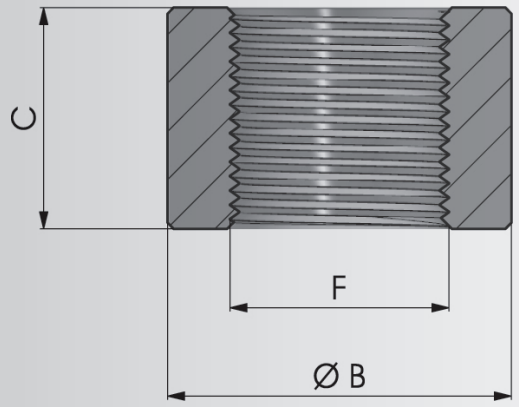


| COD. | F | B | C | Kg |
|---|---|---|---|---|
| NBBORSGI1/8 | 1/8" | 16 | 10 | 0,01 |
| NBBORSGI1/4 | 1/4" | 20 | 15 | 0,02 |
| NBBORSGI3/8 | 3/8" | 26 | 17 | 0,04 |
| NBBORSGI1/2 | 1/2" | 32 | 20 | 0,08 |
| NBBORSGI3/4 | 3/4" | 38 | 21 | 0,10 |
| NBBORSGI1 | 1" | 45 | 25 | 0,15 |
| NBBORSGI11/4 | 1"1/4 | 55 | 26 | 0,21 |
| NBBORSGI11/2 | 1"1/2 | 62 | 30 | 0,30 |
| NBBORSGI2 | 2" | 75 | 32 | 0,42 |