Naldoni e Biondi NBBORSCLG1/4 weld-on cylinder blind port

Manufacturer: Naldoni e Biondi

Manufacturer part number / published order designation: NBBORSCLG1/4

Published model: NBBORSCLG1/4

About this compilation

Prepared by Hydmaster from selected manufacturer documentation. Original technical pages follow without cropped drawings, rewritten data or altered units. This cover and index are Hydmaster editorial material, not a manufacturer-issued exact-execution datasheet.

Coverage: selected pages relevant to the identified size and configuration. Other options or neighbouring models retained on an original page apply only where explicitly identified.

Execution notes and conditions

The exact manufacturer article number is printed in the original table and matches the selected supplier MPN and its own stock-model technical row. The supplier brand is absent (--); the listing proves an offered catalogue designation, not independent authentication of an individual supplied unit.

Naldoni e Biondi NBBORSCLG1/4 is a steel S355J2C blind port in the NBBORSCLG cylinder-parts family. It is a weld-on oil-connection component for hydraulic-cylinder fabrication. The CL section shows a closed-bottom, female-threaded blind bore. B is outside diameter and C overall height. A retains its original catalogue drawing label. It is a fabrication component with a blind bottom, not an open-through connection or an interchangeable P/PL port.

No working-pressure, flow, cylinder-load, sealing-interface or welding-procedure rating is inferred from this component table. Dimensions retain their original drawing references. The genuine supplier photograph is representative and may be shared between sizes or P/PL lengths; use the exact original row and section for geometry.

Source-page index

Source page numbers below are physical pages of each complete original PDF. The original printed page labels and technical content remain unchanged. Compiled page numbers count this cover/index.

Source A: Exact rows, material statement and correct original section geometry, one complete original physical page

Original pages	Compiled pages	Relevant content
91	2	Exact rows, material statement and correct original section geometry, one complete original physical page

NBBORSCLG

Borchia cieca / Blind port

> **Materiale di produzione:**
Acciaio S355J2C

> **Production material :**
Steel S355J2C

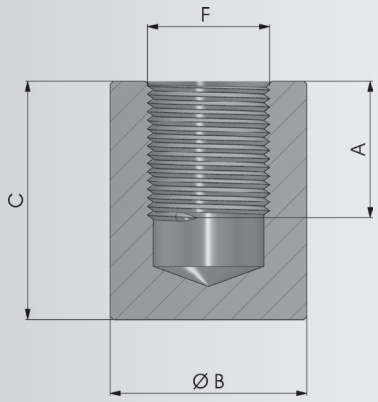

COD.	F	C	B	A	Kg
NBBORSCLG1/4	1/4"	30	22	14	0,07
NBBORSCLG3/8	3/8"	35	26	16	0,10
NBBORSCLG1/2	1/2"	35	30	18	0,12

NBBORSCLM

> **Materiale di produzione:**
Acciaio S355J2C

> **Production material :**
Steel S355J2C

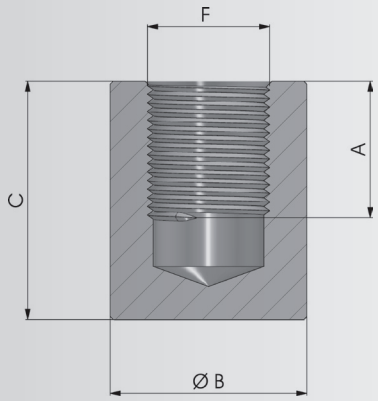

COD.	F	C	B	A	Kg
NBBORSCLM16	M16X1.5	30	22	14	0,06
NBBORSCLM18	M18X1.5	35	26	16	0,10
NBBORSCLM22	M22X1.5	35	30	18	0,12