Naldoni e Biondi NBBAOS060000 hydraulic cylinder swinging ball-and-socket end

Manufacturer: Naldoni e Biondi

Manufacturer part number / published order designation: NBBAOS060000

Published model: NBBAOS060000

About this compilation

Prepared by Hydmaster from selected manufacturer documentation. Original technical pages follow without cropped drawings, rewritten data or altered units. This cover and index are Hydmaster editorial material, not a manufacturer-issued exact-execution datasheet.

Coverage: selected pages relevant to the identified size and configuration. Other options or neighbouring models retained on an original page apply only where explicitly identified.

Execution notes and conditions

The exact article number is printed in the manufacturer table and matches the selected supplier MPN. The supplier brand field is absent (--); this establishes the observed catalogue designation, not independent authentication of individual supplied units.

The original drawing defines A as spherical diameter, B as base outside diameter, C as overall height, D as a catalogue dimension and E as shank diameter. The Italian C45 and English 080M46 material designations are retained without an independent equivalence certification. No pressure, load capacity or welding procedure is inferred.

The genuine supplier photograph is representative and shared between sizes; it does not certify the dimensions or finish of an individual unit.

Source-page index

Source page numbers below are physical pages of each complete original PDF. The original printed page labels and technical content remain unchanged. Compiled page numbers count this cover/index.

Source A: Exact article table and matching original section drawing, one complete original physical page

Original pages	Compiled pages	Relevant content
54	2	Exact article table and matching original section drawing, one complete original physical page

NBBAOS

Base oscillante / Swinging end

> **Materiale di produzione:**
Acciaio C45

> **Production material :**
Steel 080M46

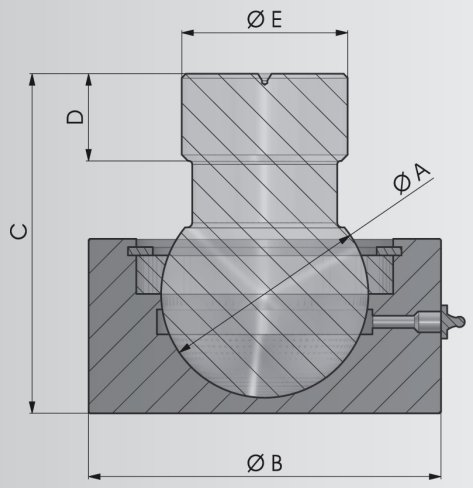

COD.	A	B	C	D	E	Kg
NBBAOS050000	50	85	82	20	40	2,2
NBBAOS060000	60	98	100	25	50	3,45
NBBAOS070000	70	105	115	30	60	4,83