Naldoni e Biondi NBAFSI000040 stainless steel fixed weld-on cylinder eye

Manufacturer: Naldoni e Biondi

Manufacturer part number / published order designation: NBAFSI000040

Published model: NBAFSI000040

About this compilation

Prepared by Hydmaster from selected manufacturer documentation. Original technical pages follow without cropped drawings, rewritten data or altered units. This cover and index are Hydmaster editorial material, not a manufacturer-issued exact-execution datasheet.

Coverage: selected pages relevant to the identified size and configuration. Other options or neighbouring models retained on an original page apply only where explicitly identified.

Execution notes and conditions

Original physical77/printed76 supplies the exact NBAFSI000040 row and NBAFSI family drawing.

Manufacturer minimum-batch flag; batch quantity unspecified.

Original drawing is not a photograph. No pressure/load/welding/corrosion-life rating inferred.

Source-page index

Source page numbers below are physical pages of each complete original PDF. The original printed page labels and technical content remain unchanged. Compiled page numbers count this cover/index.

Source A: Naldoni e Biondi NBAFSI fixed terminals - exact article reference

Original pages	Compiled pages	Relevant content
77	2	Relevant unchanged original page

Terminale fisso / Fix terminal

> **Materiale di produzione:**
Acciaio inox AISI 316 L

> **Production material :**
AISI 316 L-type stainless steel

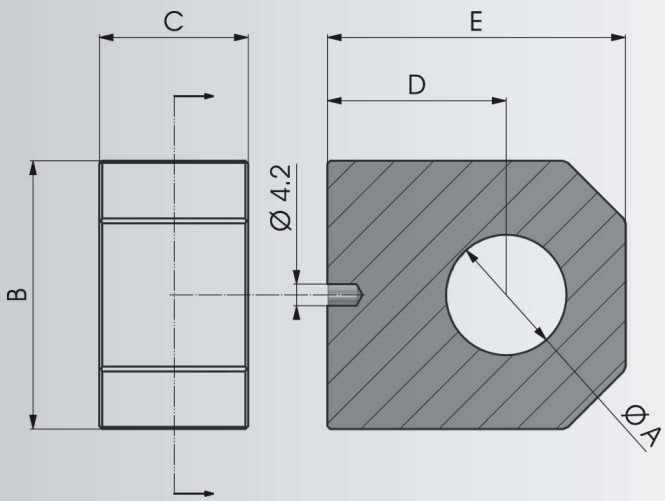

COD.	A	B	C	D	E	Kg
▸ NBAFSI000016	16.2	35	20	25	42	0,18
▸ NBAFSI000020	20.2	45	25	30	50	0,36
▸ NBAFSI000025	25.2	50	30	35	60	0,56
▸ NBAFSI000030	30.2	60	35	45	75	0,98
▸ NBAFSI000035	35.2	70	40	55	90	1,62
▸ NBAFSI000040	40.2	70	40	60	95	1,63

▸ a richiesta su lotto minimo / on request on a minimum batch